DISTRIBUTION CONSTRUCTION STANDARDS

Date Published: 12 October 2020

PART 10 - SUBSTATIONS

G8 – DISTRIBUTION AUTOMATION

For application to

Horizon Power

Electricity Distribution Networks

G8 - DISTRIBUTION AUTOMATION – Drawing Register

Number	Description
G8-7/1	Schneider RM6 RMU MPS Transformer – Schneider Switchgear – Located Adjacent or Close to RMU – Installation Details
G8-7/2	Schneider RM6 RMU Local Pillar – AC Power Supply to RTU – Installation Details
G8-7/3	Schenider RM6 RMU Spuds Transformer – AC Power Supply to RTU – Installation Details
G8-7/4	Schneider RM6 RMU RTU, Modem and Antenna Wiring Diagram – Installation Details
G8-7/6	Schneider RM6 Indoor Metering Direct Bus Application – Switchgear Support Details
G8-7/7	Schneider RM6 RMU CT Connection Diagram – Distribution Automation
G8-7/8	Schneider RM6 RMU (T300) – Connection Detail

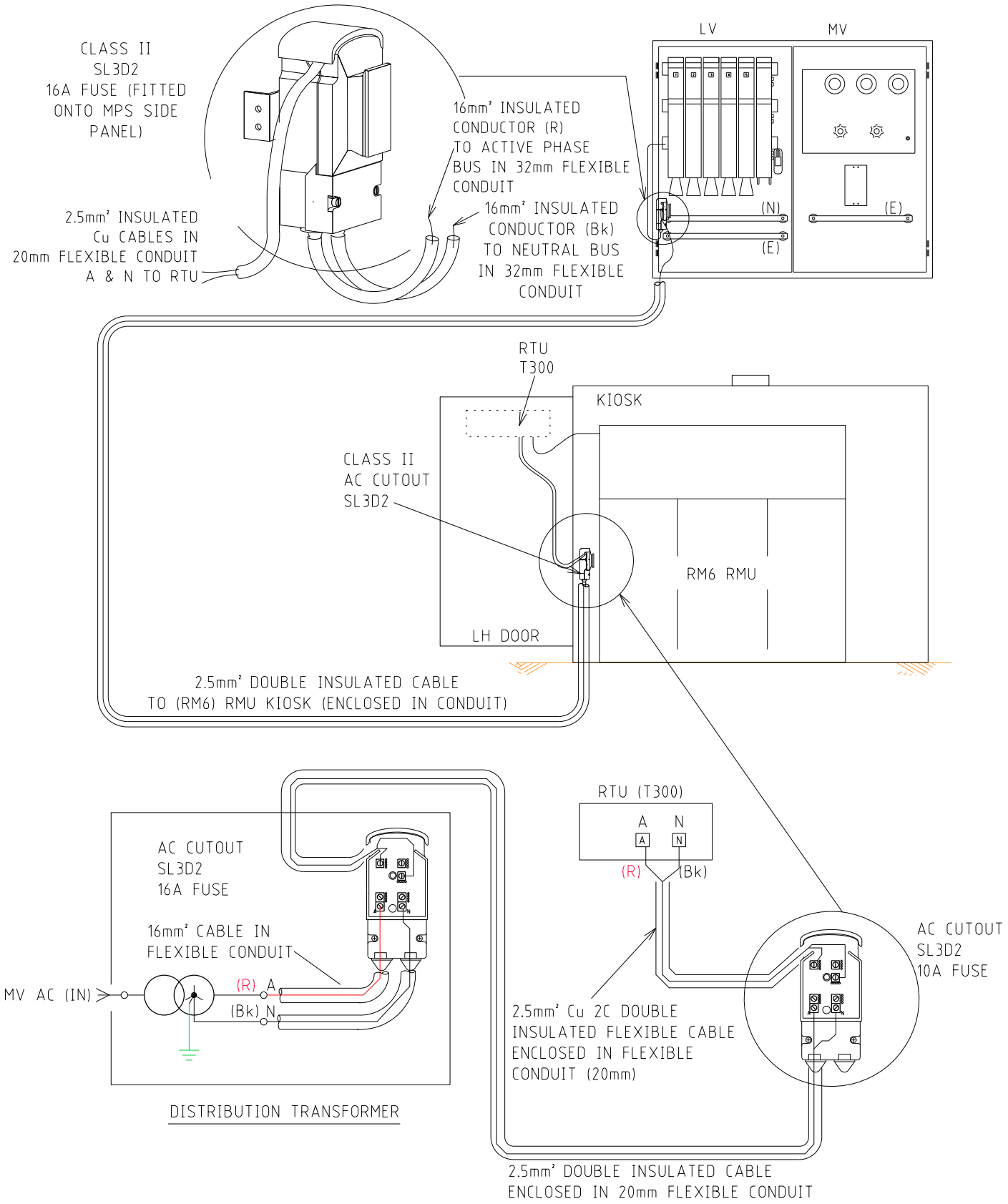

THIS DRAWING TO BE READ IN CONJUNCTION WITH THE DISTRIBUTION DESIGN RULES - HPC-9DJ-01-0002-2015.

HORIZON POWER DISTRIBUTION CONSTRUCTION STANDARDS	DISTRIBUTION AUTOMATION	REVISION C	DATE 07/10/2020
OPERATIONS DIVISION	SCHNEIDER RM6 RMU MPS TRANSFORMER SUPPLY (LOCATED ADJACENT OR CLOSE TO RMU) INSTALLATION DETAILS	DRAWING No. G8-07/1	

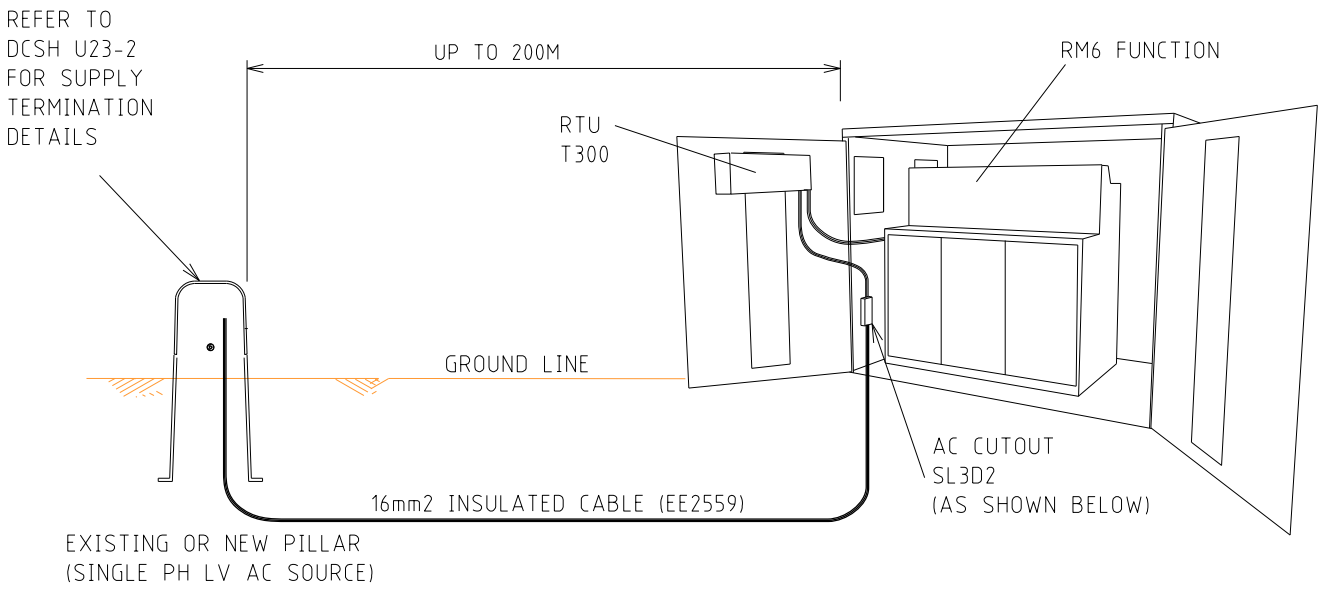

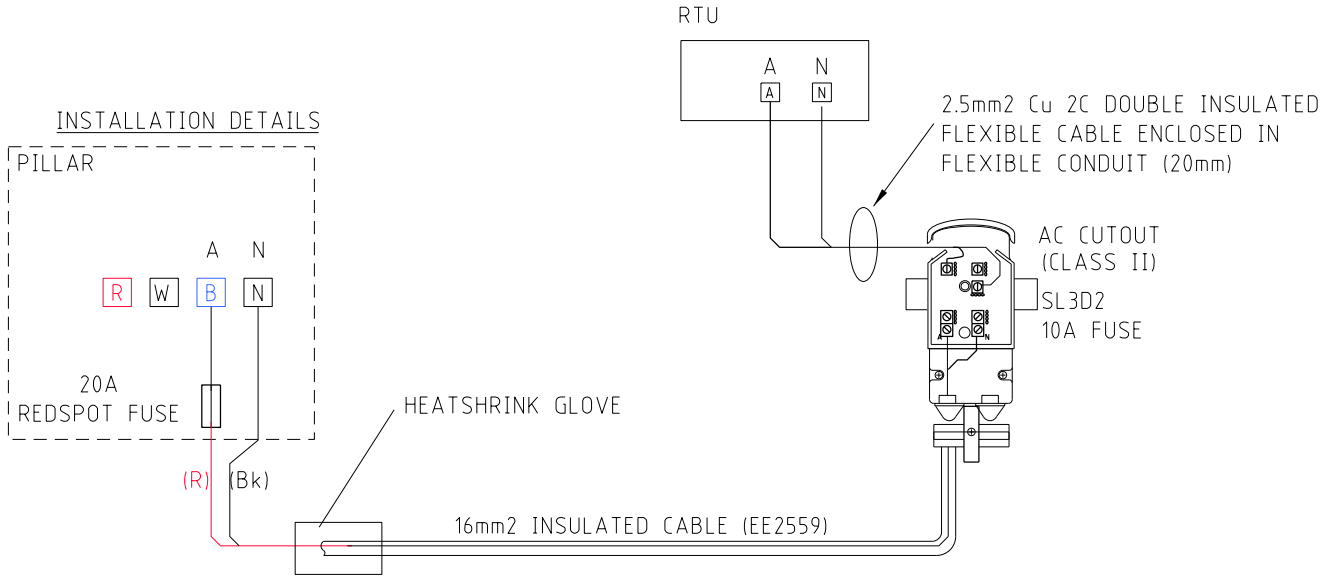

THIS DRAWING TO BE READ IN CONJUNCTION WITH THE DISTRIBUTION DESIGN RULES - HPC-9DJ-01-0002-2015.

HORIZON POWER DISTRIBUTION CONSTRUCTION STANDARDS	SCHNEIDER RM6 RMU LOCAL PILLAR AC POWER SUPPLY TO RTU INSTALLATION DETAILS	REVISION C	DATE 04/09/2020
		DRAWING No. G8-07/2	

APPLICABLE WHERE NEAREST AVAILABLE LV POWER SUPPLY GREATER THAN 200M

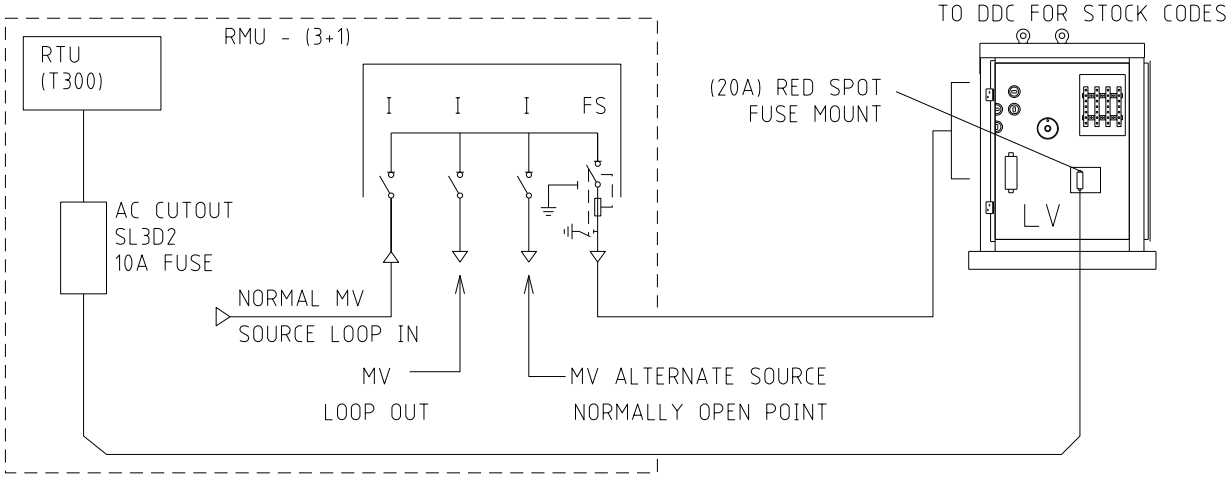

INSTALLATION DETAILS

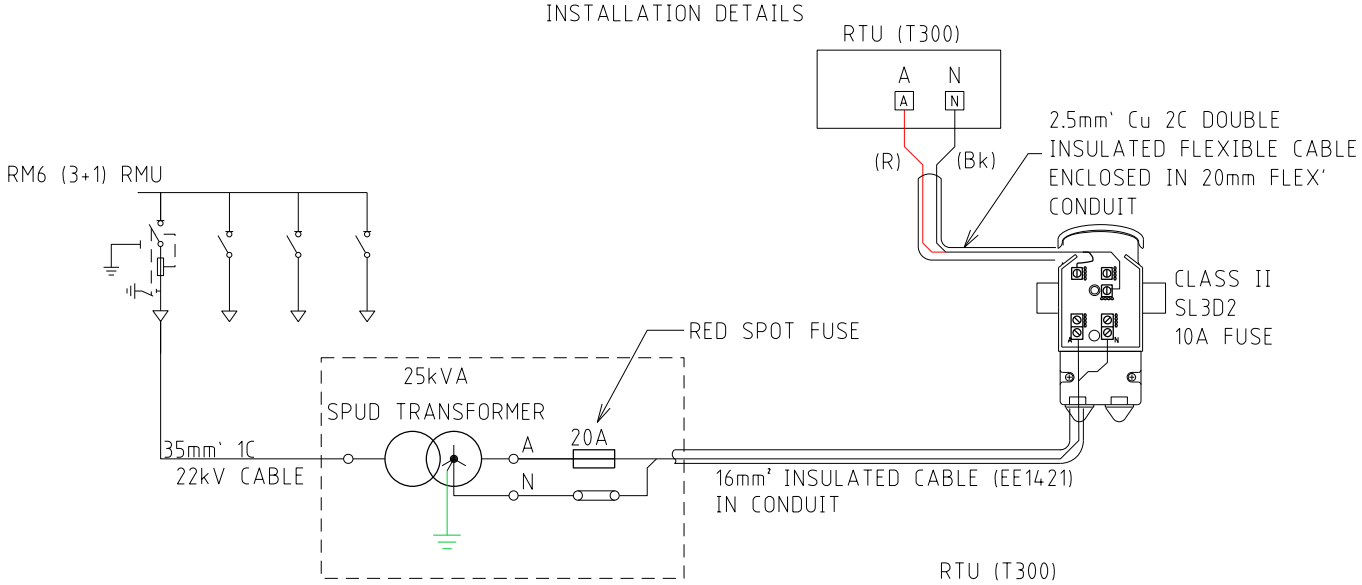

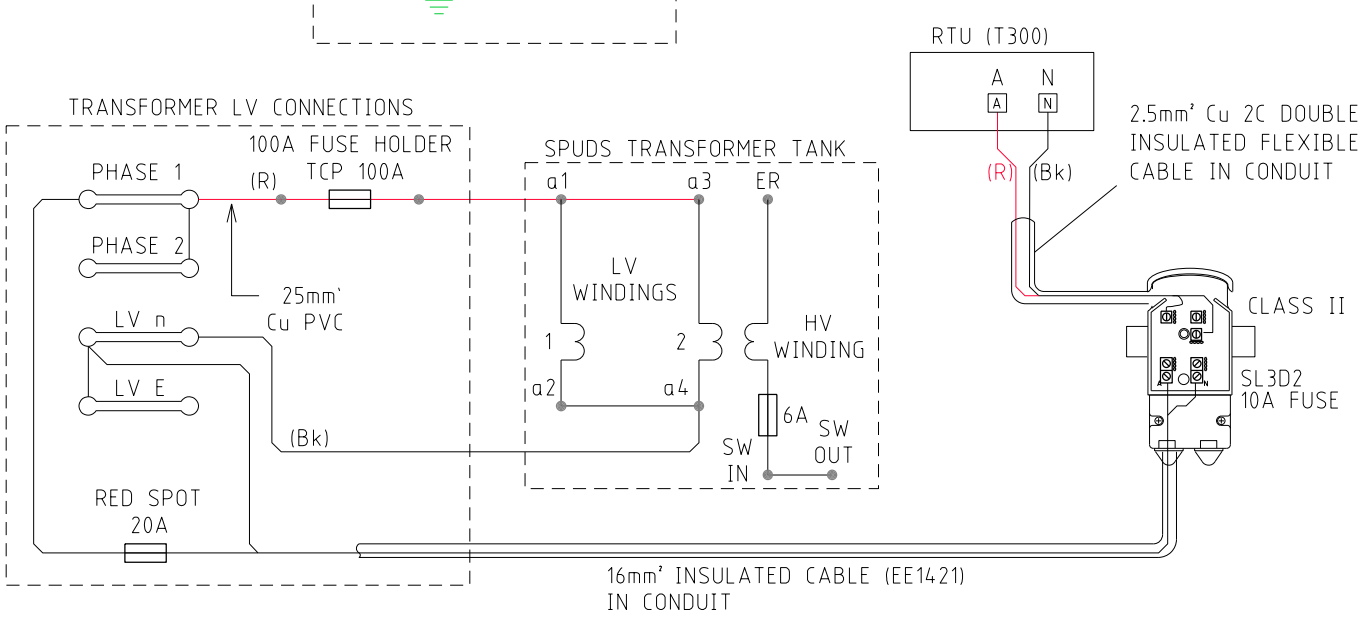

THIS DRAWING TO BE READ IN CONJUNCTION WITH THE DISTRIBUTION DESIGN RULES - HPC-9DJ-01-0002-2015.

HORIZON POWER DISTRIBUTION CONSTRUCTION STANDARDS	DISTRIBUTION AUTOMATION	REVISION C	DATE 07/10/2020
OPERATIONS DIVISION	SCHNEIDER RM6 RMU SPUDS TRANSFORMER SUPPLY INSTALLATION DETAILS	DRAWING No. G8-07/3	

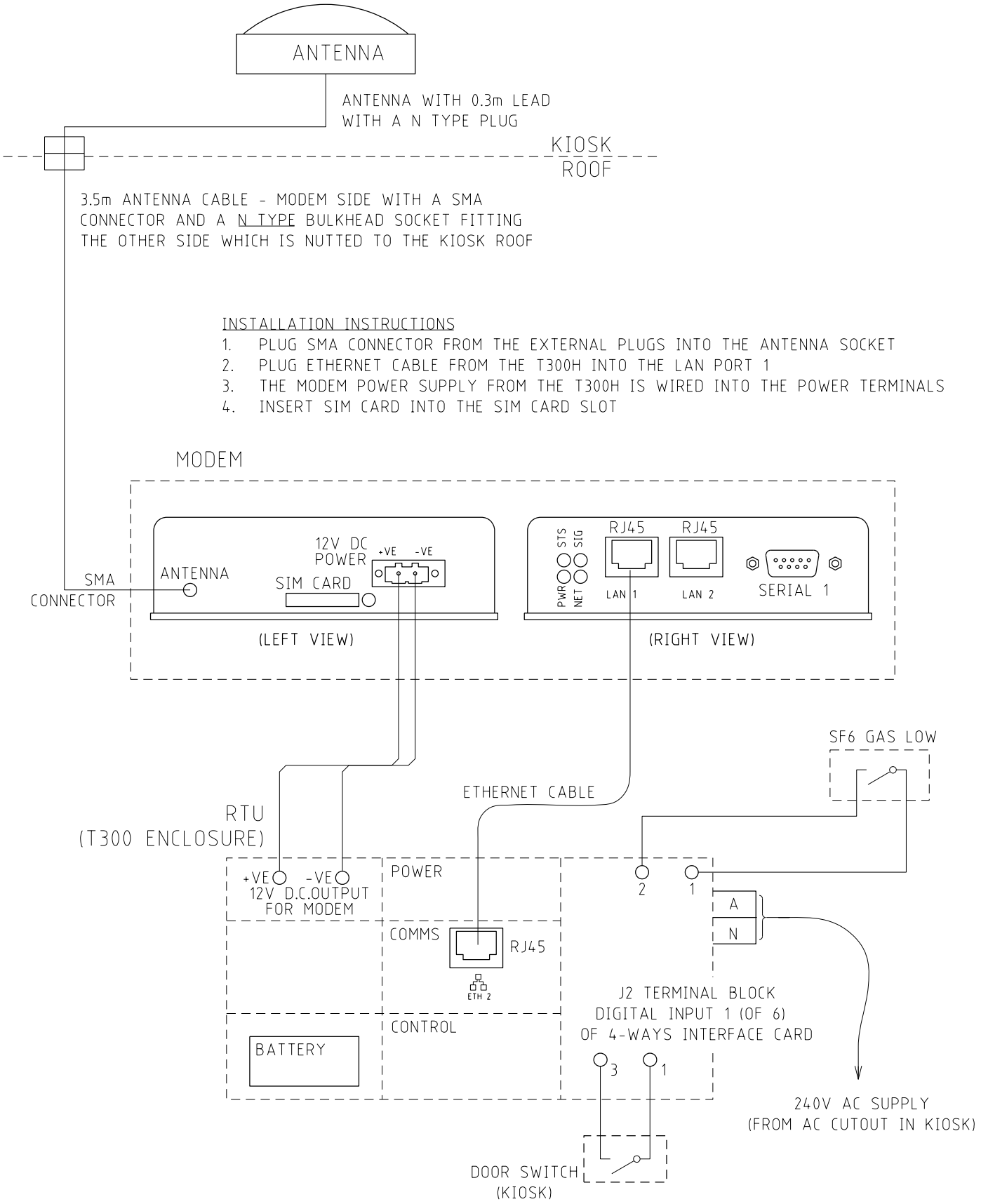

NOTE: T300, MODEM, AND ANTENNA TO BE INSTALLED BY OT.

THIS DRAWING TO BE READ IN CONJUNCTION WITH THE DISTRIBUTION DESIGN RULES - HPC-9DJ-01-0002-2015.

HORIZON POWER DISTRIBUTION CONSTRUCTION STANDARDS	DISTRIBUTION AUTOMATION	REVISION C	DATE 07/10/2020
OPERATIONS DIVISION	SCHNEIDER RM6 RMU RTU, MODEM AND ANTENNA WIRING DIAGRAM INSTALLATION DETAILS	DRAWING No. G8-07/4	

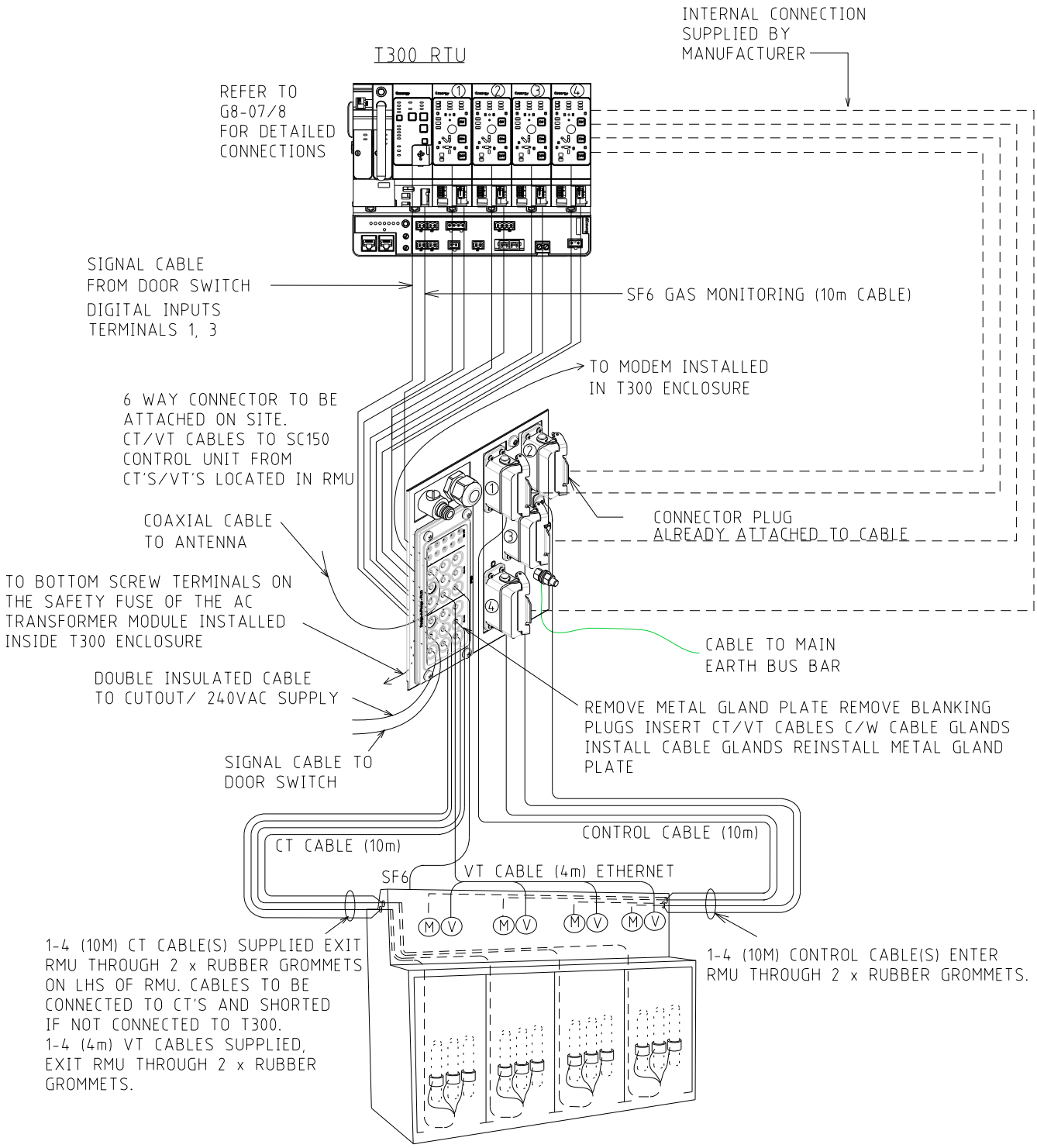

INSTALL PROVIDED 3 x SPLIT CT'S (TOROIDS) TO ALL THE FEEDER CABLES IN CABLE COMPARTMENT- NOTE CT POLARITY. ENSURE THAT CABLES, CABLE SCREENS & DRAIN WIRES PASS THROUGH THE RESPECTIVE CT'S. ENSURE THAT THE CT EARTH WIRES (Y/Gn) ARE TERMINATED AT THE COMMON COPPER EARTH BAR LOCATED IN THE RESPECTIVE CABLE COMPARTMENT

NOTES:
1: T300, MODEM, AND ANTENNA TO BE INSTALLED BY OT.
2: CT CABLES OF INSTALLED CT'S ARE TO BE SHORTED IF NOT CONNECTED TO T300.

THIS DRAWING TO BE READ IN CONJUNCTION WITH THE DISTRIBUTION DESIGN RULES - HPC-9DJ-01-0002-2015.

HORIZON POWER DISTRIBUTION CONSTRUCTION STANDARDS	DISTRIBUTION AUTOMATION	REVISION C	DATE 07/10/2020
OPERATIONS DIVISION	SCHNEIDER RM6 RMU (T300) CONNECTION DRAWING INSTALLATION DETAILS	DRAWING No. G8-07/6	

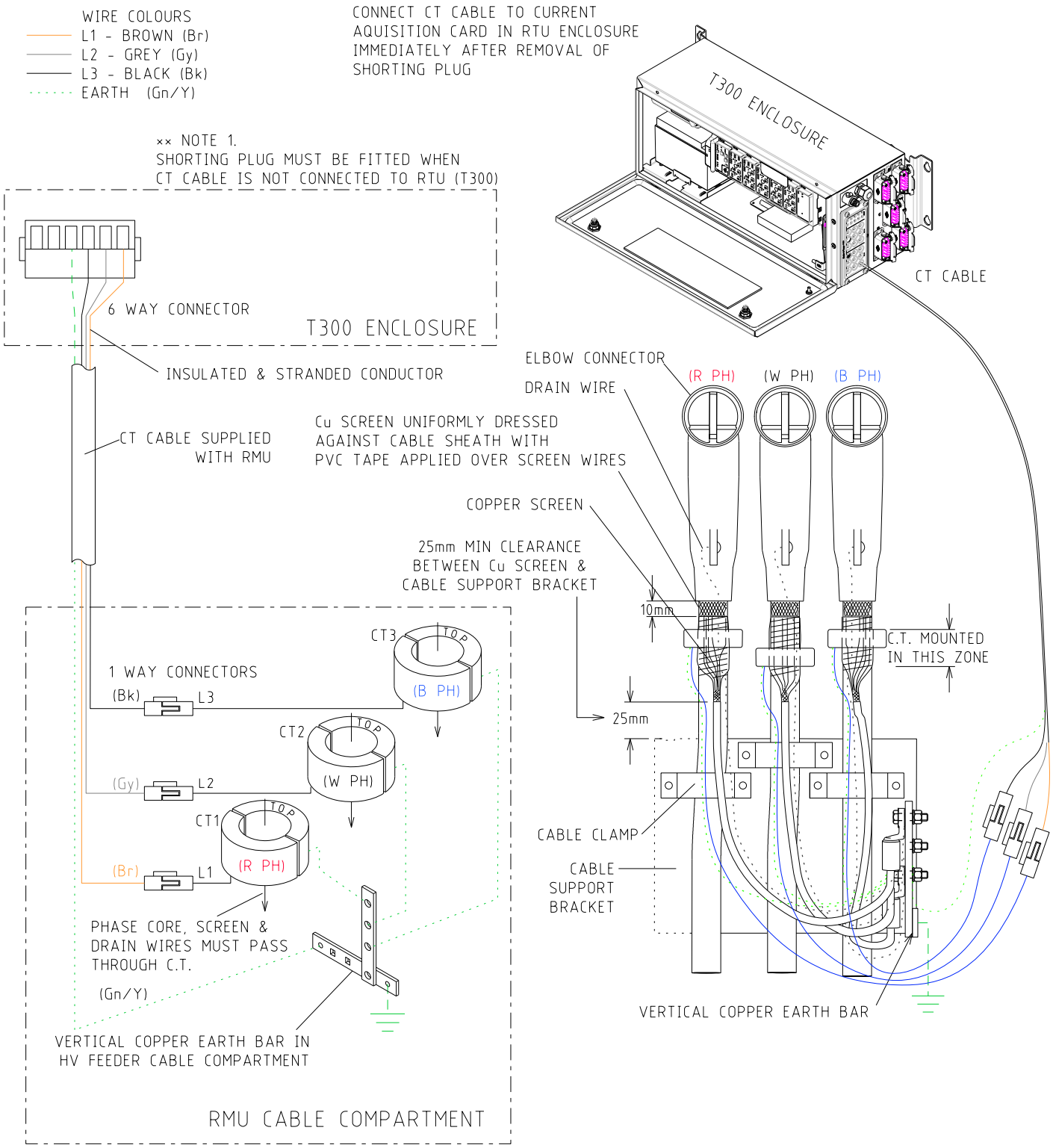

NOTES:

1: SHORTING PLUG MUST BE FITTED WHEN CT CABLE IS NOT CONNECTED TO RTU (T300)

2. C.T.'s MUST BE MOUNTED ON THE CABLES IN THE CORRECT ORIENTATION. WITH "TOP" AT THE TOP AND THE WIRE OUTLET AT THE BOTTOM OF C.T.'s (SEE ILLUSTRATION)

THIS DRAWING TO BE READ IN CONJUNCTION WITH THE DISTRIBUTION DESIGN RULES - HPC-9DJ-01-0002-2015.

HORIZON POWER DISTRIBUTION CONSTRUCTION STANDARDS	DISTRIBUTION AUTOMATION	REVISION C	DATE 07/10/2020
OPERATIONS DIVISION	SCHNEIDER RM6 RMU (T300) CT INSTALLATION DIAGRAM DISTRIBUTION AUTOMATION	DRAWING No. G8-07/7	

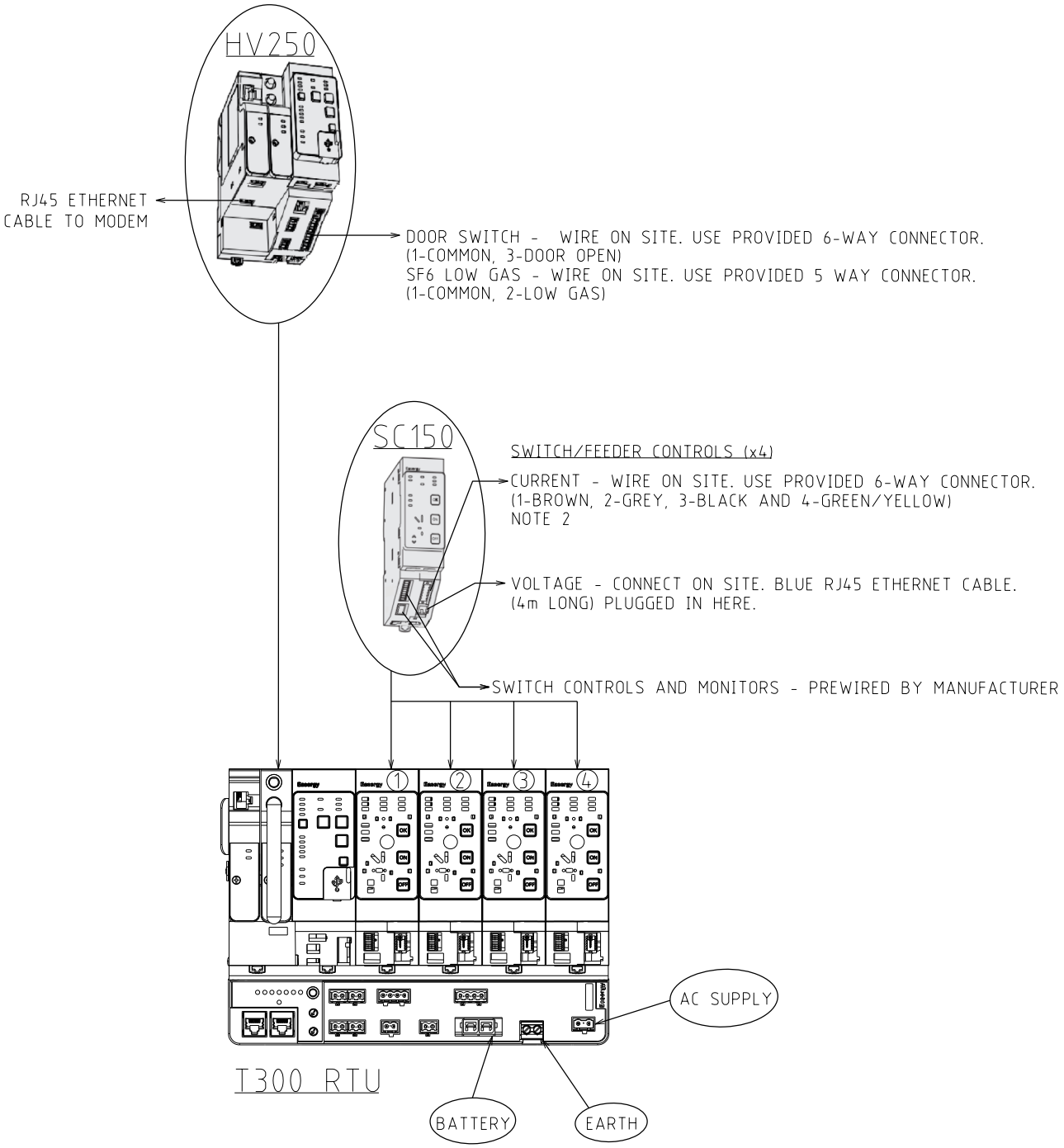

NOTES:
1: T300, MODEM, AND ANTENNA TO BE INSTALLED BY OT.
2: CT CABLES OF INSTALLED CT'S ARE TO BE SHORTED IF NOT CONNECTED TO T300.

THIS DRAWING TO BE READ IN CONJUNCTION WITH THE DISTRIBUTION DESIGN RULES - HPC-9DJ-01-0002-2015.

HORIZON POWER DISTRIBUTION CONSTRUCTION STANDARDS	DISTRIBUTION AUTOMATION	REVISION A	DATE 07/10/2020
OPERATIONS DIVISION	SCHNEIDER RM6 RMU (T300) CONNECTION DETAIL	DRAWING No. G8-07/8	