Distribution Design Catalogue – Section 08: TX - Transformers

Standard Number: HPC-1DC-07-0008-2014

Original Issue Date: 01 July 2009
Document Number: 2488318

Print Date: 17/06/2025

Uncontrolled document when downloaded. Refer to Horizon Power's website for most current version.

© Horizon Power Corporation 2016

Document Control			
Revision 5 Author	**Name:** Katerina Veljanoski **Position:** Grad Engineer Engineering & Project Services	Katerina Veljanoski	Digitally signed by Katerina Veljanoski Date: 2025.06.17 08:10:55 +08'00'
Reviewed By	**Name:** Paul Savig **Position:** Senior Standards Engineer		Digitally signed by Paul Savig Date: 2025.06.17 08:15:06 +08'00'
Endorsed By	**Name:** Johnathan Choi **Position:** Standards & Plant Manager		Digitally signed by Johnathan Choi Date: 2025.06.17 11:01:04 +08'00'
Approved By *	**Name:** Victor Cheng **Position:** Senior Manager Engineering & Project Services		Digitally signed by Victor Cheng Date: 2025.06.19 14:10:02 +08'00'
Date Created/Last Updated	09/06/2025		
Review Frequency **	Annually		
Next Review Date **	09/06/2026		

** Shall be the Process Owner and is the person assigned authority and responsibility for managing the whole process, end-to-end, which may extend across more than one division and/or functions, in order to deliver agreed business results.*

*** Frequency period is dependent upon circumstances– maximum is 5 years from last issue, review, or revision whichever is the latest. If left blank, the default shall be 1 year unless otherwise specified.*

Revision Control		
Revision	**Date**	**Description**
5	09/06/2025	Reviewed and updated
4	24/04/2024	Reviewed and updated
3	21/01/2014	Change of Document Control, drawing dimensions removed

STAKEHOLDERS *The following positions shall be consulted if an update or review is required:*	
Asset Managers	Major Projects
Works Delivery Managers	*Engineering & Project Services*
Asset Services	*All Other Key Groups outside of Operations*

TRANSFORMER LIST

CU	CU DESCRIPTION
TX1_25/11	Transformer with bare LV 25 kVA 11 kV
TX1_25/22	Transformer with bare LV 25 kVA 22 kV
TX1_25/33	Transformer with bare LV 25 kVA 33 kV
TX1_63/11	Transformer with bare LV 63 kVA 6.6-11 kV
TX1_63/22	Transformer with bare LV 63 kVA 22 kV
TX1_63/33	Transformer with bare LV 63 kVA 33 kV
TX2_100/11_F	Transformer with bare LV 100 kVA 6.6-11 kV with fuse unit
TX2_100/22_F	Transformer with bare LV 100 kVA 22 kV with fuse unit
TX2_100/33_F	Transformer with bare LV 100 kVA 33 kV with fuse unit
TX2_200/11_F	Transformer with bare LV 200 kVA 6.6-11 kV with fuse unit
TX2_200/22_F	Transformer with bare LV 200 kVA 22 kV with fuse unit
TX2_200/33_F	Transformer with bare LV 200 kVA 33 kV with fuse unit
TX3_10/11	Transformer only 10 kVA 6.6-11 kV 2 bushing
TX3_10/12.7	Transformer only 10 kVA 12.7 kV 1 bushing
TX3_10/19.1	Transformer only 10 kVA 19.1 kV 1 bushing
TX3_10/22B2	Transformer only 10 kVA 22 kV 2 bushing
TX3_25/11	Transformer only 25 kVA 6.6-11 kV 3 bushing
TX3_25/12.7	Transformer only 25 kVA 12.7 kV 1 bushing
TX3_25/19.1	Transformer only 25 kVA 19.1 kV 1 bushing
TX3_25/22	Transformer only 25 kVA 22 kV 3 bushing
TX3_25/22B2	Transformer only 25 kVA 22 kV 2 bushing
TX3_25/33	Transformer only 25 kVA 33 kV 3 bushing
TX3_25/33B2	Transformer only 25 kVA 33 kV 2 bushing
TX3_63/11	Transformer only 63 kVA 11 kV 3 bushing
TX3_63/22	Transformer only 63 kVA 22 kV 3 bushing
TX3_63/33	Transformer only 63 kVA 33 kV 3 bushing
TX3_100/11	Transformer only 100 kVA 6.6-11 kV 3 bushing
TX3_100/22	Transformer only 100 kVA 22 kV 3 bushing
TX3_100/33	Transformer only 100 kVA 33 kV 3 bushing
TX3_200/11	Transformer only 200 kVA 11 kV 3 bushing
TX3_200/22	Transformer only 200 kVA 22 kV 3 bushing
TX3_200/33	Transformer only 200 kVA 33 kV 3 bushing
TX3_315/11	Transformer only 315 kVA 11 kV 3 bushing
TX3_315/22	Transformer only 315 kVA 22 kV 3 bushing
TX3_315/33	Transformer only 315 kVA 33 kV 3 bushing

TX4_25/11	Transformer with LVABC 25 kVA 11 kV
TX4_25/22	Transformer with LVABC 25 kVA 22 kV
TX4_25/33	Transformer with LVABC 25 kVA 33 kV
TX4_63/11	Transformer with LVABC 63 kVA 11 kV
TX4_63/22	Transformer with LVABC 63 kVA 22 kV
TX4_63/33	Transformer with LVABC 63 kVA 33 kV
TX4_100/11	Transformer with LVABC 100 kVA 6.6-11 kV
TX4_100/22	Transformer with LVABC 100 kVA 22 kV
TX4_100/33	Transformer with LVABC 100 kVA 33 kV
TX4_200/11	Transformer with LVABC 200 kVA 6.6-11 kV
TX4_200/22	Transformer with LVABC 200 kVA 22 kV
TX4_200/33	Transformer with LVABC 200 kVA 33 kV
TX5_10/11B2	Transformer 10 kVA 11 kV 1 phase 2 bushing 240 V
TX5_10/11B2P	Transformer 10 kVA 11 kV 1 phase 2 bushing 240 V
TX5_10/19.1	Transformer 10 kVA 19.1 kV 1 phase 1 bushing 240 V
TX5_10/19.1P	Transformer 10 kVA 19.1 kV 1 phase 1 bushing 480 V
TX5_10/22B2	Transformer 10 kVA 22 kV 1 phase 2 bushing 240 V
TX5_10/22B2P	Transformer 10 kVA 22 kV 1 phase 2 bushing 480 V
TX5_25/19.1	Transformer 25 kVA 19.1 kV 1 phase 1 bushing 240 V
TX5_25/19.1P	Transformer 25 kVA 19.1 kV 1 phase 1 bushing 480 V
TX5_25/22B2	Transformer 25 kVA 22 kV 1 phase 2 bushing 240 V
TX5_25/22B2P	Transformer 25 kVA 22 kV 1 phase 2 bushing 480 V
TX7_22	Pole top metering transformer outdoor 22 kV
TX7_33	Pole top metering transformer outdoor 33 kV

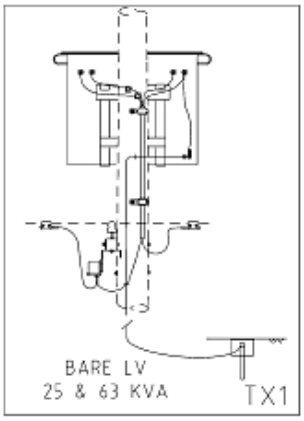

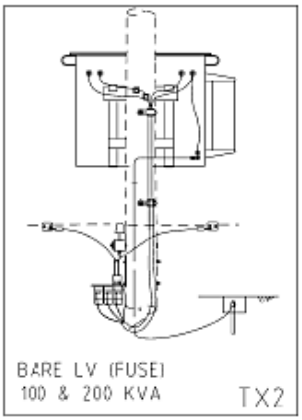

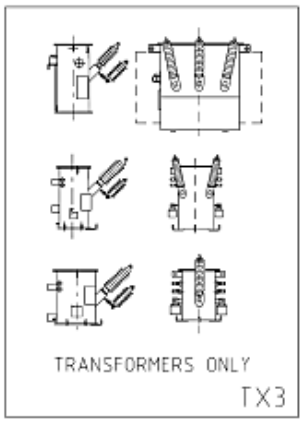

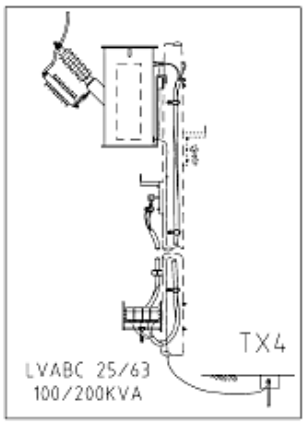

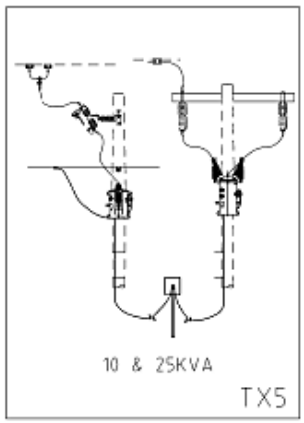

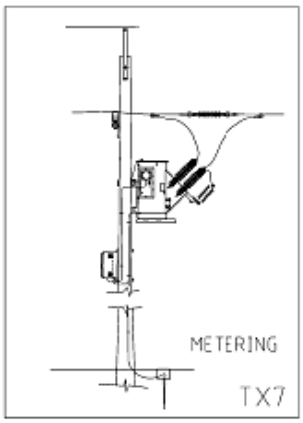

HORIZON POWER DISTRIBUTION DESIGN CATALOGUE ENGINEERING DIVISION	COMPATIBLE UNIT	REVISION 4	DATE 11/06/25
	TX COMPATIBLE UNITS	DRAWING No. TX INDEX	

Index Table

Reference	Description
1	Krone Box (GS0111) is compatible with the below fuse link cartridges: • GF0512 (200A) – NH1 Fuse • GF1096 (200A) – NH2 Fuse
2	Recommended that concrete poles without the double hole arrangement as shown be replaced.
3	Surge arrestors to be secured using manufacturer's M12 Nuts and Washers. If none are supplied, alternatives to be used are: • AN2003 x 3 • AW3523 x 3
4	For parallel transformer configuration, select suitable fuse to accommodate full output from both transformers OR for sole use installations, select fuse size to suit CMD.

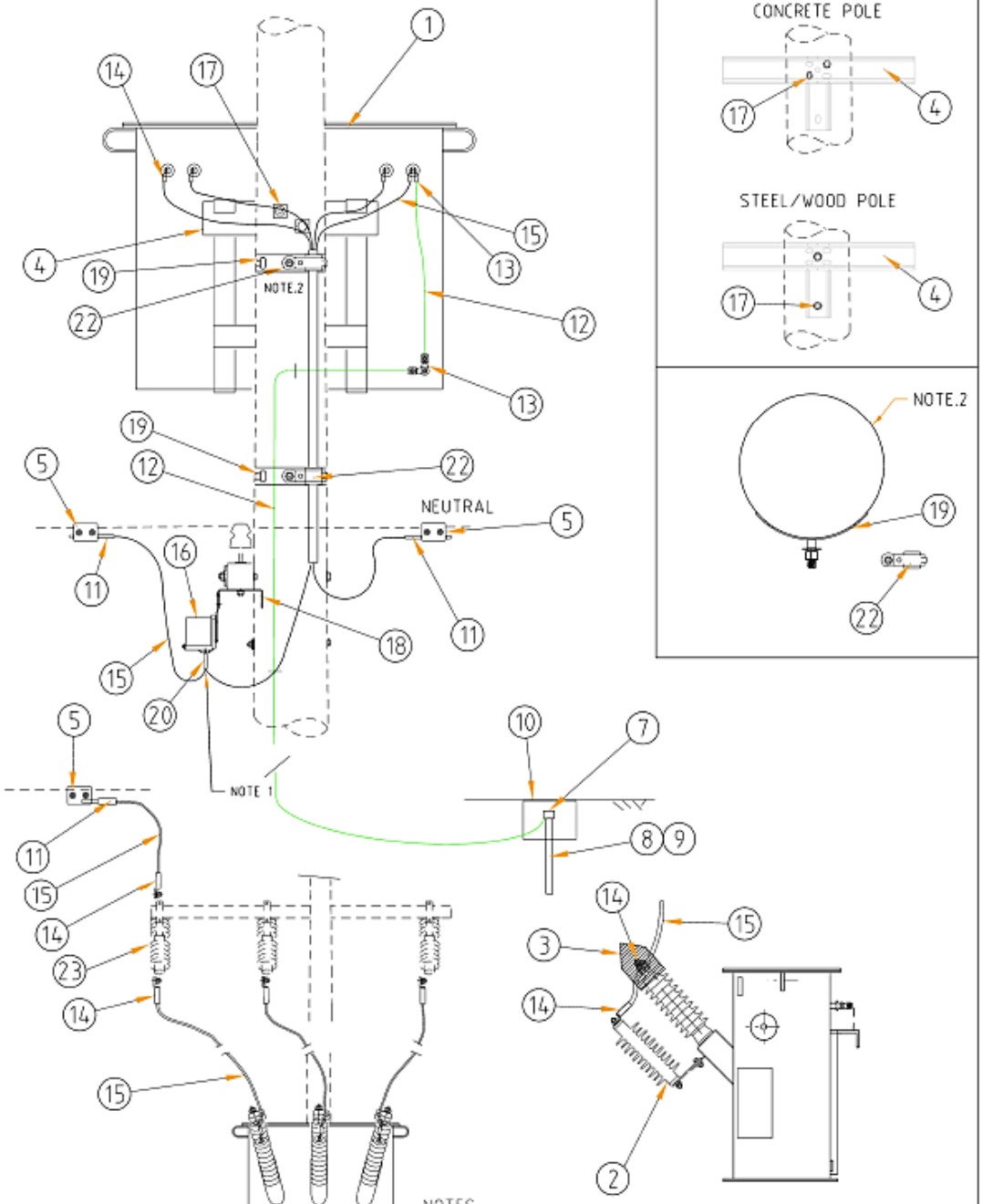

NOTES:
1. ITEM 20 TRIM COPPER TAIL TO ALLOW INSULATION TO ENTER FUSE BOX AS MARKED ON FUSE BOX HOUSING.
2. USE BANDIT STRAPS TO SECURE LV HARNESS SUPPORT BRACKET TO POLE.
3. 63KVA TX REPRESENTED. 25KVA HAS LV BUSHINGS ON THE SIDE OF THE TANK

HORIZON POWER DISTRIBUTION DESIGN CATALOGUE ENGINEERING DIVISION	COMPATIBLE UNIT	REVISION 4	DATE 11/06/25
	TRANSFORMER WITH BARE LV 25 AND 63 kVA	DRAWING No. TX1	

CU	CU DESCRIPTION
TX1_25/11	Transformer with bare LV 25 kVA 11 kV

Item Number	Stock Number	Description	Qty Rqd	Unit of Measure	Remarks
1	XT0210	Transformer 25kVA, 6.6-11kV/440V	1	ea	
2	GA4055	Surge arrester	3	ea	REF. 3 of Index Table
3	GT0353	Transformer bushing cover	3	ea	
4	CB0112	Transformer hanger cross-arm (steel)	1	ea	
5		Select Parallel groove (PG) Clamp to suit conductor. **Select from CN9**	7	ea	
7	CE0058	Earth rod clamp	1	ea	
8	CE0078	Earth coupling	3	ea	
9	CE0135	Earth rod	4	ea	1.4 m
10	CE0201	Earth box	1	ea	
11		Splice 95 ABC to suit conductor and PG clamp. **Select from CN69 or CN70**	7	ea	
12	EE1264	70sq mm Stranded copper	12	mtr	
13	FL1465	70sq mm Lug copper	3	ea	
14	FL0401	Bi-metal lug 95 ABC	19	ea	
15	FT0095	95 ABC 4 x 4 m long	3	ea	
16	GF1801	Flowline fuse box	3	ea	
16	GF1926	Flowline 63A 415V fuse link cartridge	3	ea	
17	AB6737	Pole bolt M20 x 400 mm long with nut and washers	2	ea	REF. 2 of Index Table
18	CB3054	Flowline fuse mounting bracket	1	ea	
19	CB3055	LV harness support bracket	2	ea	
20	CJ0492	Flowline splice 95 ABC with copper tail	6	ea	
22	CC0101	95 ABC clamp	2	ea	
If a drop out fuse is required					
23		Select Drop-out fuse cross-arm for intermediate. **Select from HV20.**	1	ea	

CU	CU DESCRIPTION
TX1_25/22	Transformer with bare LV 25 kVA 22 kV

Item Number	Stock Number	Description	Qty Rqd	Unit of Measure	Remarks
1	XT0215	Transformer 25kVA, 22kV/440V	1	ea	
2	GA4056	Surge arrester	3	ea	REF. 3 of Index Table
3	GT0353	Transformer bushing cover	3	ea	
4	CB0112	Transformer Hanger Cross-arm (Steel)	1	ea	
5		Select Parallel groove (PG) Clamp to suit conduct **Select from CN9**	7	ea	
7	CE0058	Earth rod clamp	1	ea	
8	CE0078	Earth coupling	3	ea	
9	CE0135	Earth rod	4	ea	1.4 m
10	CE0201	Earth box	1	ea	
11		Splice 95 ABC to suit conductor and PG clamp. **Select from CN69 or CN70**	7	ea	
12	EE1264	70sq mm Stranded copper	12	mtr	
13	FL1465	70sq mm Lug copper	3	ea	
14	FL0401	Bi-metal lug 95 ABC	19	ea	
15	FT0095	95 ABC 4 x 4 m long	3	ea	
16	GF1801	Flowline fuse box	3	ea	
16	GF1926	Flowline 63A 415V Fuse link cartridge	3	ea	
17	AB6737	Pole bolt M20 x 400 mm long with nut and washers	2	ea	REF. 2 of Index Table
18	CB3054	Flowline fuse mounting bracket	1	ea	
19	CB3055	LV harness support bracket	2	ea	
20	CJ0492	Flowline splice 95 ABC with copper tail	6	ea	
22	CC0101	95 ABC clamp	2	ea	
If a drop out fuse is required					
23		Select Drop-out fuse cross-arm for intermediate. **Select from HV20.**	1	ea	

CU	CU DESCRIPTION
TX1_25/33	Transformer with bare LV 25 kVA 33 kV

Item Number	Stock Number	Description	Qty Rqd	Unit of Measure	Remarks
1	XT0220	Transformer 25kVA, 33kV/440V	1	ea	
2	GA4057	Surge arrester	3	ea	REF. 3 of Index Table
3	GT0353	Transformer bushing cover	3	ea	
4	CB0112	Transformer hanger cross-arm (steel)	1	ea	
5		Select Parallel groove (PG) Clamp to suit conductor. **Select from CN9**	7	ea	
7	CE0058	Earth rod clamp	1	ea	
8	CE0078	Earth coupling	3	ea	
9	CE0135	Earth rod	4	ea	1.4 m
10	CE0201	Earth box	1	ea	
11		Splice 95 ABC to suit conductor and PG clamp. **Select from CN69 or CN70**	7	ea	
12	EE1264	70sq mm Stranded copper	12	mtr	
13	FL1465	70sq mm Lug copper	3	ea	
14	FL0401	Bi-metal lug 95 ABC	19	ea	
15	FT0095	95 ABC 4 x 4 m long	3	ea	
16	GF1801	Flowline fuse box	3	ea	
16	GF1926	Flowline 63A 415V fuse link cartridge	3	ea	
17	AB6737	Pole bolt M20 x 400 mm long with nut and washers	2	ea	REF. 2 of Index Table
18	CB3054	Flowline fuse mounting bracket	1	ea	
19	CB3055	LV harness support bracket	2	ea	
20	CJ0492	Flowline splice 95 ABC with copper tail	6	ea	
22	CC0101	95 ABC clamp	2	ea	
If a drop out fuse is required					
23		Select Drop-out fuse cross-arm for intermediate. **Select from HV20.**	1	ea	

CU	CU DESCRIPTION
TX1_63/11	Transformer with bare LV 63 kVA 11 kV

Item Number	Stock Number	Description	Qty Rqd	Unit of Measure	Remarks
1	XT0211	Transformer 63kVA, 11kV/440V	1	ea	
2	GA4055	Surge arrester	3	ea	REF. 3 of Index Table
3	GT0353	Transformer bushing cover	3	ea	
4	CB0112	Transformer hanger cross-arm (Steel)	1	ea	
5		Select Parallel groove (PG) Clamp to suit conductor. **Select from CN9**	7	ea	
7	CE0058	Earth rod clamp	1	ea	
8	CE0078	Earth coupling	3	ea	
9	CE0135	Earth rod	4	ea	1.4 m
10	CE0201	Earth box	1	ea	
11		Splice 95 ABC to suit conductor and PG clamp. **Select from CN69 or CN70**	7	ea	
12	EE1264	70sq mm Stranded copper	12	mtr	
13	FL1465	70sq mm Lug copper	3	ea	
14	FL0401	Bi-metal lug 95 ABC	19	ea	
15	FT0095	95 ABC 4 x 4 m long	2	ea	
16	GF1801	Flowline fuse box	3	ea	
16	GF1947	Flowline 100A, 240/415V fuse link cartridge	3	ea	
17	AB6737	Pole bolt M20 x 400 mm long with nut and washers	2	ea	REF. 2 of Index Table
18	CB3054	Flowline fuse mounting bracket	1	ea	
19	CB3055	LV harness support bracket	2	ea	
20	CJ0492	Flowline splice 95 ABC with copper tail	6	ea	
22	CC0101	95 ABC clamp	2	ea	
If a drop out fuse is required					
23		Select Drop-out fuse cross-arm for intermediate. **Select from HV20.**	1	ea	

CU	CU DESCRIPTION
TX1_63/22	Transformer with bare LV 63 kVA 22 kV

Item Number	Stock Number	Description	Qty Rqd	Unit of Measure	Remarks
1	XT0216	Transformer 63kVA, 22kV/440V	1	ea	
2	GA4056	Surge arrester	3	ea	REF. 3 of Index Table
3	GT0353	Transformer bushing cover	3	ea	
4	CB0112	Transformer hanger cross-arm (steel)	1	ea	
5		Select Parallel groove (PG) Clamp to suit conductor. **Select from CN9**	7	ea	
7	CE0058	Earth rod clamp	1	ea	
8	CE0078	Earth coupling	3	ea	
9	CE0135	Earth rod	4	ea	1.4 m
10	CE0201	Earth box	1	ea	
11		Splice 95 ABC to suit conductor and PG clamp. **Select from CN69 or CN70**	7	ea	
12	EE1264	70sq mm Stranded copper	12	mtr	
13	FL1465	70sq mm Lug copper	3	ea	
14	FL0401	Bi-metal lug 95 ABC	19	ea	
15	FT0095	95 ABC 4 x 4 m long	2	ea	
16	GF1801	Flowline fuse box	3	ea	
16	GF1947	Flowline 100A, 240/415V fuse link cartridge	3	ea	
17	AB6737	Pole bolt M20 x 400 mm long with nut and washers	2	ea	REF. 2 of Index Table
18	CB3054	Flowline fuse mounting bracket	1	ea	
19	CB3055	LV harness support bracket	2	ea	
20	CJ0492	Flowline splice 95 ABC with copper tail	6	ea	
22	CC0101	95 ABC clamp	2	ea	
If a drop out fuse is required					
23		Select Drop-out fuse cross-arm for intermediate. **Select from HV20.**	1	ea	

CU	CU DESCRIPTION
TX1_63/33	Transformer with bare LV 63 kVA 33 kV

Item Number	Stock Number	Description	Qty Rqd	Unit of Measure	Remarks
1	XT0221	Transformer 63kVA, 33kV/440V	1	ea	
2	GA4057	Surge arrester	3	ea	REF. 3 of Index Table
3	GT0353	Transformer bushing cover	3	ea	
4	CB0112	Transformer hanger cross-arm (steel)	1	ea	
5		Select Parallel groove (PG) Clamp to suit conductor. **Select from CN9**	7	ea	
7	CE0058	Earth rod clamp	1	ea	
8	CE0078	Earth coupling	3	ea	
9	CE0135	Earth rod	4	ea	1.4 m
10	CE0201	Earth box	1	ea	
11		Splice 95 ABC to suit conductor and PG clamp. **Select from CN69 or CN70**	7	ea	
12	EE1264	70sq mm Stranded copper	12	mtr	
13	FL1465	70sq mm Lug copper	3	ea	
14	FL0401	Bi-metal lug 95 ABC	19	ea	
15	FT0095	95 ABC 4 x 4 m long	2	ea	
16	GF1801	Flowline fuse box	3	ea	
16	GF1947	Flowline 100A, 240/415V fuse link cartridge	3	ea	
17	AB6737	Pole bolt M20 x 400 mm long with nut and washers	2	ea	REF. 2 of Index Table
18	CB3054	Flowline fuse mounting bracket	1	ea	
19	CB3055	LV harness support bracket	2	ea	
20	CJ0492	Flowline splice 95 ABC with copper tail	6	ea	
22	CC0101	95 ABC clamp	2	ea	
If a drop out fuse is required					
23		Select Drop-out fuse cross-arm for intermediate. **Select from HV20.**	1	ea	

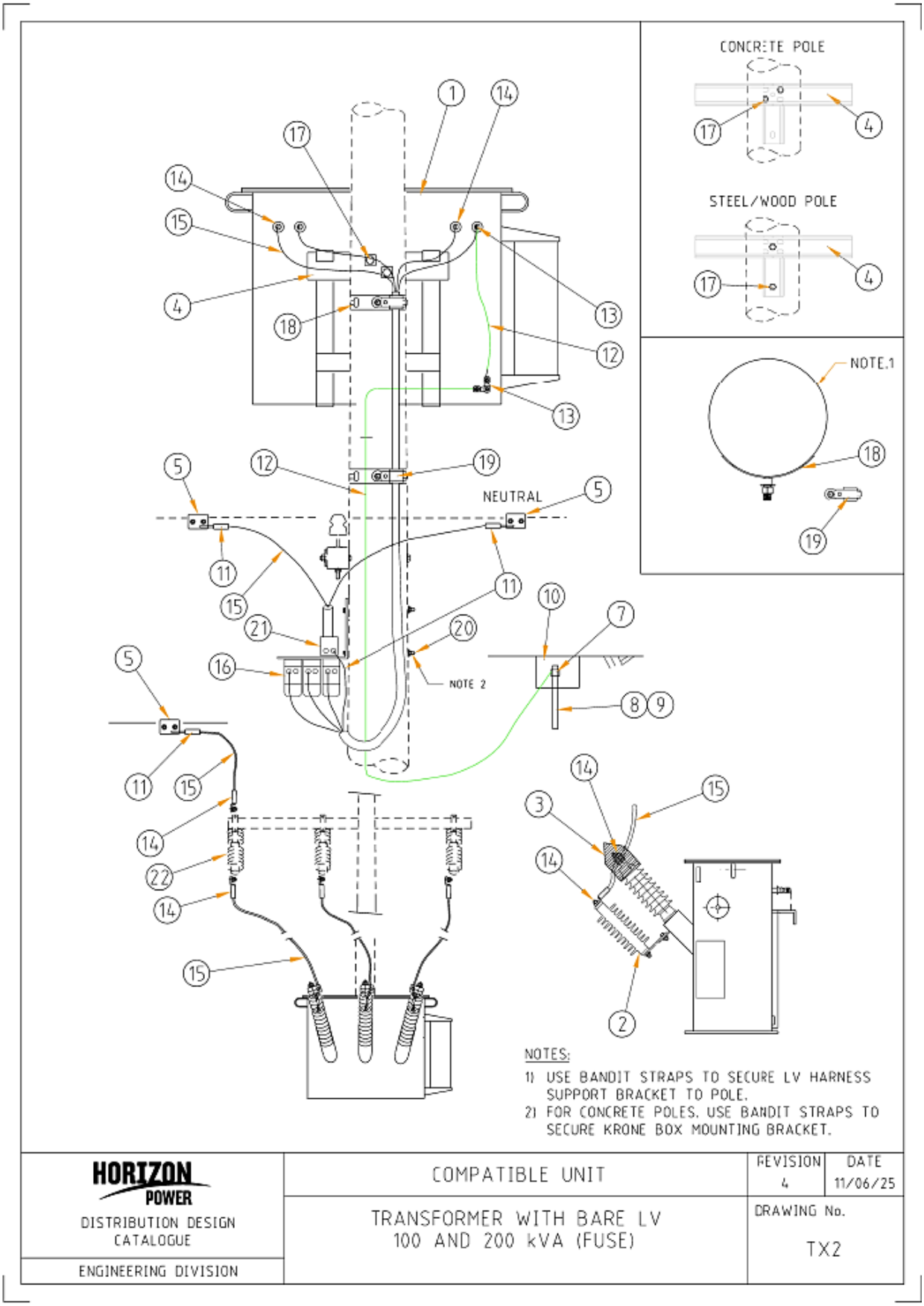
CONCRETE POLE
STEEL/WOOD POLE
NOTE.1
NEUTRAL
NOTE 2
NOTES:
1) USE BANDIT STRAPS TO SECURE LV HARNESS SUPPORT BRACKET TO POLE.
2) FOR CONCRETE POLES. USE BANDIT STRAPS TO SECURE KRONE BOX MOUNTING BRACKET.
HORIZON POWER
DISTRIBUTION DESIGN CATALOGUE
ENGINEERING DIVISION
COMPATIBLE UNIT
TRANSFORMER WITH BARE LV 100 AND 200 kVA (FUSE)
REVISION 4
DATE 11/06/25
DRAWING No.
TX2

CU	CU DESCRIPTION
TX2_100/11_F	Transformer with bare LV 100 kVA 11 kV with fuse unit

Item Number	Stock Number	Description	Qty Rqd	Unit of Measure	Remarks
1	XT0212	Transformer 100kVA 11kV/440V	1	ea	
2	GA4055	Surge arrester	3	ea	REF. 3 of Index Table
3	GT0353	Transformer bushing cover	3	ea	
4	CB0112	Transformer hanger cross-arm (steel)	1	ea	
5		Select Parallel groove (PG) Clamp to suit conductor. **Select from CN9**	7	ea	
7	CE0058	Earth rod clamp	1	ea	
8	CE0078	Earth coupling	3	ea	
9	CE0135	Earth rod	4	ea	1.4 m
10	CE0201	Earth box	1	ea	
11	CJ0494	Splice 95 ABC with alum tail	15	ea	
12	EE1264	70sq mm Stranded copper	12	mtr	
13	FL1465	70sq mm Lug copper	3	ea	
14	FL0401	Lug 95 ABC	19	ea	
15	FT0095	95 ABC 4 x 4 m long	2	ea	
16	GS0111	Fuse switch box	1	ea	
16	GF1096	Fuse link element 200A	3	ea	REF. 1 of Index Table
17	AB6737	Pole bolt M20 x 400 mm long with nut and washers	2	ea	
18	CB3055	LV harness support bracket	2	ea	
19	CC0101	95 ABC clamp	2	ea	
20	AB6733	Pole bolt M16 x 400 mm long with nut and washers	2	ea	REF. 2 of Index Table
21	GS0109	Neutral block with pole mounting bracket	1	ea	
If a drop out fuse is required					
22		Select Drop-out fuse cross-arm for intermediate. **Select from HV20.**	1	ea	

CU	CU DESCRIPTION
TX2_100/22_F	Transformer with bare LV 100 kVA 22 kV with fuse unit

Item Number	Stock Number	Description	Qty Rqd	Unit of Measure	Remarks
1	XT0217	Transformer 100kVA 22kV/440V	1	ea	
2	GA4056	Surge arrester	3	ea	REF. 3 of Index Table
3	GT0353	Transformer bushing cover	3	ea	
4	CB0112	Transformer hanger cross-arm (steel)	1	ea	
5		Select Parallel groove (PG) Clamp to suit conductor. **Select from CN9**	7	ea	
7	CE0058	Earth rod clamp	1	ea	
8	CE0078	Earth coupling	3	ea	
9	CE0135	Earth rod	4	ea	1.4 m
10	CE0201	Earth box	1	ea	
11	CJ0494	Splice 95 ABC with alum tail	15	ea	
12	EE1264	70sq mm Stranded copper	12	mtr	
13	FL1465	70sq mm Lug copper	3	ea	
14	FL0401	Lug 95 ABC	19	ea	
15	FT0095	95 ABC 4 x 4 m long	2	ea	
16	GS0111	Fuse switch box	1	ea	
16	GF1096	Fuse link element 200A	3	ea	REF. 1 of Index Table
17	AB6737	Pole bolt M20 x 400 mm long with nut and washers	2	ea	
18	CB3055	LV harness support bracket	2	ea	
19	CC0101	95 ABC clamp	2	ea	
20	AB6733	Pole bolt M16 x 400 mm long with nut and washers	2	ea	REF. 2 of Index Table
21	GS0109	Neutral block with pole mounting bracket	1	ea	
If a drop out fuse is required					
22		Select Drop-out fuse cross-arm for intermediate. **Select from HV20.**	1	ea	

CU	CU DESCRIPTION
TX2_100/33_F	Transformer with bare LV 100 kVA 33 kV with fuse unit

Item Number	Stock Number	Description	Qty Rqd	Unit of Measure	Remarks
1	XT0222	Transformer 100kVA 33kV/440V	1	ea	
2	GA4057	Surge arrester	3	ea	REF. 3 of Index Table
3	GT0353	Transformer bushing cover	3	ea	
4	CB0112	Transformer hanger cross-arm (Steel)	1	ea	
5		Select Parallel groove (PG) Clamp to suit conductor. **Select from CN9**	7	ea	
7	CE0058	Earth rod clamp	1	ea	
8	CE0078	Earth coupling	3	ea	
9	CE0135	Earth rod	4	ea	1.4 m
10	CE0201	Earth box	1	ea	
11	CJ0494	Splice 95 ABC with alum tail	15	ea	
12	EE1264	70sq mm Stranded copper	12	mtr	
13	FL1465	70sq mm Lug copper	3	ea	
14	FL0401	Lug 95 ABC	19	ea	
15	FT0095	95 ABC 4 x 4 m long	2	ea	
16	GS0111	Fuse switch box	1	ea	
16	GF1096	Fuse link element 200A	3	ea	REF. 1 of Index Table
17	AB6737	Pole bolt M20 x 400 mm long with nut and washers	2	ea	
18	CB3055	LV harness support bracket	2	ea	
19	CC0101	95 ABC clamp	2	ea	
20	AB6733	Pole bolt M16 x 400 mm long with nut and washers	2	ea	REF. 2 of Index Table
21	GS0109	Neutral block with pole mounting bracket	1	ea	
If a drop out fuse is required					
22		Select Drop-out fuse cross-arm for intermediate. **Select from HV20.**	1	ea	

CU	CU DESCRIPTION
TX2_200/11_F	Transformer with bare LV 200 kVA 11 kV with fuse unit

Item Number	Stock Number	Description	Qty Rqd	Unit of Measure	Remarks
1	XT0213	Transformer 200kVA 6.6-11kV/440V	1	ea	
2	GA4055	Surge arrester	3	ea	REF. 3 of Index Table
3	GT0353	Transformer bushing cover	3	ea	
4	CB0112	Transformer hanger cross-arm (steel)	1	ea	
5		Select Parallel groove (PG) Clamp to suit conductor. **Select from CN9**	7	ea	
7	CE0058	Earth rod clamp	1	ea	
8	CE0078	Earth coupling	3	ea	
9	CE0135	Earth rod	4	ea	1.4 m
10	CE0201	Earth box	1	ea	
11	CJ0494	Splice 95 ABC with alum tail	3	ea	
11	CJ0496	Splice 150 ABC with alum tail	12	ea	
12	EE1264	70sq mm Stranded copper	12	mtr	
13	FL1465	70sq mm Lug copper	3	ea	
14	FL0401	Lug 95 ABC	15	ea	
14	FL0402	Lug 150 ABC	4	ea	
15	FT0095	95 ABC 4 x 4 m long	1	ea	
15	FT0150	150 ABC 4 x 4 m long	1	ea	
16	GS0111	Fuse switch box	1	ea	
16	GF1101	Fuse link element 315A	3	ea	
17	AB6737	Pole bolt M20 x 400 mm long with nut and washers	2	ea	
18	CB3055	LV harness support bracket	2	ea	
19	CC0110	150 ABC clamp	2	ea	
20	AB6733	Pole bolt M16 x 400 mm long with nut and washers	2	ea	REF. 2 of Index Table
21	GS0109	Neutral block with pole mounting bracket	1	ea	
If a drop out fuse is required					
22		Select Drop-out fuse cross-arm for intermediate. **Select from HV20.**	1	ea	

CU	CU DESCRIPTION
TX2_200/22_F	Transformer with bare LV 200 kVA 22 kV with fuse unit

Item Number	Stock Number	Description	Qty Rqd	Unit of Measure	Remarks
1	XT0218	Transformer 200kVA 22kV/440V	1	ea	
2	GA4056	Surge arrester	3	ea	REF. 3 of Index Table
3	GT0353	Transformer bushing cover	3	ea	
4	CB0112	Transformer hanger cross-arm (steel)	1	ea	
5		Select Parallel groove (PG) Clamp to suit conductor. **Select from CN9**	7	ea	
7	CE0058	Earth rod clamp	1	ea	
8	CE0078	Earth coupling	3	ea	
9	CE0135	Earth rod	4	ea	1.4 m
10	CE0201	Earth box	1	ea	
11	CJ0494	Splice 95 ABC with alum tail	3	ea	
11	CJ0496	Splice 150 ABC with alum tail	12	ea	
12	EE1264	70sq mm Stranded copper	12	mtr	
13	FL1465	70sq mm Lug copper	3	ea	
14	FL0401	Lug 95 ABC	15	ea	
14	FL0402	Lug 150 ABC	4	ea	
15	FT0095	95 ABC 4 x 4 m long	1	ea	
15	FT0150	150 ABC 4 x 4 m long	1	ea	
16	GS0111	Fuse switch box	1	ea	
16	GF1101	Fuse link element 315A	3	ea	
17	AB6737	Pole bolt M20 x 400 mm long with nut and washers	2	ea	
18	CB3055	LV harness support bracket	2	ea	
19	CC0110	150 ABC clamp	2	ea	
20	AB6733	Pole bolt M16 x 400 mm long with nut and washers	2	ea	REF. 2 of Index Table
21	GS0109	Neutral block with pole mounting bracket	1	ea	
If a drop out fuse is required					
22		Select Drop-out fuse cross-arm for intermediate. **Select from HV20.**	1	ea	

CU	CU DESCRIPTION
TX2_200/33_F	Transformer with bare LV 200 kVA 33 kV with fuse unit

Item Number	Stock Number	Description	Qty Rqd	Unit of Measure	Remarks
1	XT0223	Transformer 200kVA 33kV/440V	1	ea	
2	GA4057	Surge arrester	3	ea	REF. 3 of Index Table
3	GT0353	Transformer bushing cover	3	ea	
4	CB0112	Transformer hanger cross-arm (steel)	1	ea	
5		Select Parallel groove (PG) Clamp to suit conductor. **Select from CN9**	7	ea	
7	CE0058	Earth rod clamp	1	ea	
8	CE0078	Earth coupling	3	ea	
9	CE0135	Earth rod	4	ea	1.4 m
10	CE0201	Earth box	1	ea	
11	CJ0494	Splice 95 ABC with alum tail	3	ea	
11	CJ0496	Splice 150 ABC with alum tail	12	ea	
12	EE1264	70sq mm Stranded copper	12	mtr	
13	FL1465	70sq mm Lug copper	3	ea	
14	FL0401	Lug 95 ABC	15	ea	
14	FL0402	Lug 150 ABC	4	ea	
15	FT0095	95 ABC 4 x 4 m long	1	ea	
15	FT0150	150 ABC 4 x 4 m long	1	ea	
16	GS0111	Fuse switch box	1	ea	
16	GF1101	Fuse link element 315A	3	ea	
17	AB6737	Pole bolt M20 x 400 mm long with nut and washers	2	ea	
18	CB3055	LV harness support bracket	2	ea	
19	CC0110	150 ABC clamp	2	ea	
20	AB6733	Pole bolt M16 x 400 mm long with nut and washers	2	ea	REF. 2 of Index Table
21	GS0109	Neutral block with pole mounting bracket	1	ea	
If a drop out fuse is required					
22		Select Drop-out fuse cross-arm for intermediate. **Select from HV20.**	1	ea	

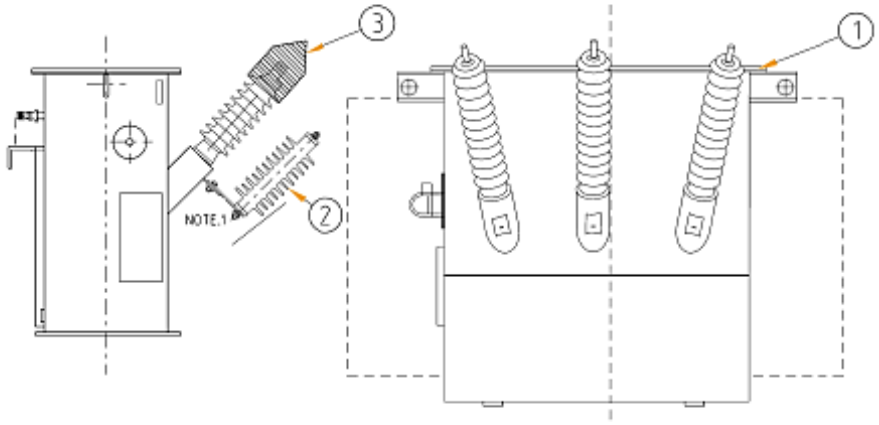

THREE PHASE - THREE BUSHING

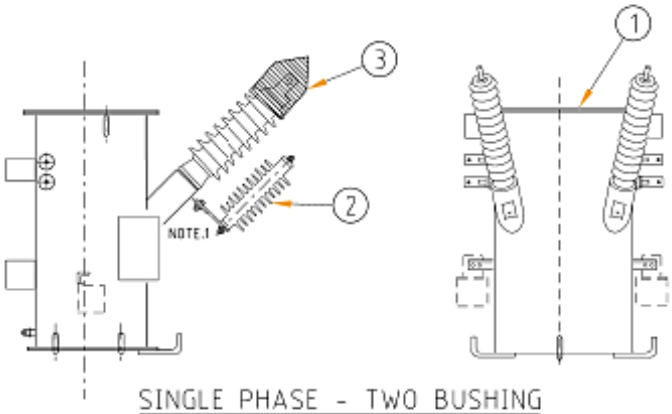

SINGLE PHASE - TWO BUSHING

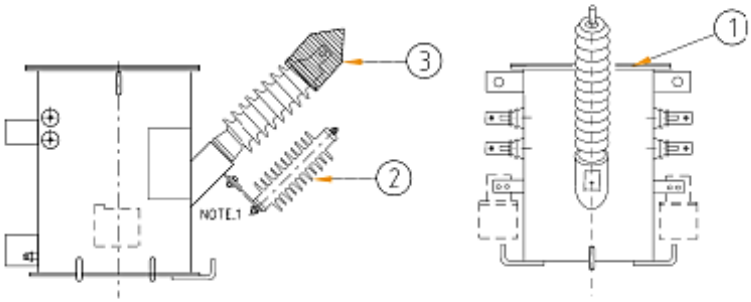

SINGLE PHASE - ONE BUSHING

NOTES:

1) M12 NUT AND BOLT TO BE USED

HORIZON POWER DISTRIBUTION DESIGN CATALOGUE ENGINEERING DIVISION	COMPATIBLE UNIT	REVISION 3	DATE 11/06/25
	TRANSFORMER ONLY	DRAWING No. TX3	

CU	CU DESCRIPTION
TX3_10/11	Transformer 10 kVA 11 kV 1 phase 2 bushing

Item Number	Stock Number	Description	Qty Rqd	Unit of Measure	Remarks
1	XT0202	Transformer 10kVA 11kV/250-500V	1	ea	
2	GA4055	Surge arrester	2	ea	REF. 3 of Index Table
3	GT0353	Transformer bushing cover	2	ea	

CU	CU DESCRIPTION
TX3_10/12.7	Transformer 10 kVA 12.7 kV 1 phase 1 bushing

Item Number	Stock Number	Description	Qty Rqd	Unit of Measure	Remarks
1	XT0206	Transformer 10kVA 12.7kV/250-500V	1	ea	
2	GA4056	Surge arrester	1	ea	REF. 3 of Index Table
3	GT0353	Transformer bushing cover	1	ea	

CU	CU DESCRIPTION
TX3_10/19.1	Transformer 10 kVA 19.1 kV 1 phase 1 bushing

Item Number	Stock Number	Description	Qty Rqd	Unit of Measure	Remarks
1	XT0208	Transformer 10kVA 19.1kV/250-500V	1	ea	
2	GA4057	Surge arrester	1	ea	REF. 3 of Index Table
3	GT0353	Transformer bushing cover	1	ea	

CU	CU DESCRIPTION
TX_10/22B2	Transformer 10 kVA 22 kV 1 phase 2 bushing

Item Number	Stock Number	Description	Qty Rqd	Unit of Measure	Remarks
1	XT0203	Transformer 10kVA 22kV/250-500V	1	ea	
2	GA4056	Surge arrester	2	ea	REF. 3 of Index Table
3	GT0353	Transformer bushing cover	2	ea	

CU	CU DESCRIPTION
TX3_25/11	Transformer 25 kVA 11 kV 3 bushing

Item Number	Stock Number	Description	Qty Rqd	Unit of Measure	Remarks
1	XT0210	Transformer 25kVA, 6.6-11kV/440V	1	ea	
2	GA4055	Surge arrester	3	ea	REF. 3 of Index Table
3	GT0353	Transformer bushing cover	3	ea	

CU	CU DESCRIPTION
TX3_25/12.7	Transformer 25 kVA 12.7 kV 1 phase 1 bushing

Item Number	Stock Number	Description	Qty Rqd	Unit of Measure	Remarks
1	XT0207	Transformer 25kVA 12.7kV/440V	1	ea	
2	GA4056	Surge arrester	1	ea	REF. 3 of Index Table
3	GT0353	Transformer bushing cover	1	ea	

CU	CU DESCRIPTION
TX3_25/19.1	Transformer 25 kVA 19.1 kV 1 phase 1 bushing

Item Number	Stock Number	Description	Qty Rqd	Unit of Measure	Remarks
1	XT0209	Transformer 25kVA 19.1kV/440V	1	ea	
2	GA4057	Surge arrester	1	ea	REF. 3 of Index Table
3	GT0353	Transformer bushing cover	1	ea	

CU	CU DESCRIPTION
TX3_25/22	Transformer 25 kVA 22 kV 3 bushing

Item Number	Stock Number	Description	Qty Rqd	Unit of Measure	Remarks
1	XT0215	Transformer 25kVA 22kV/440V	1	ea	
2	GA4056	Surge arrester	3	ea	REF. 3 of Index Table
3	GT0353	Transformer bushing cover	3	ea	

CU	CU DESCRIPTION
TX3_25/22B2	Transformer 25 kVA 22 kV 1 phase 2 bushing

Item Number	Stock Number	Description	Qty Rqd	Unit of Measure	Remarks
1	XT0204	Transformer 25kVA 22kV/440V	1	ea	
2	GA4056	Surge arrester	2	ea	REF. 3 of Index Table
3	GT0353	Transformer bushing cover	2	ea	

CU	CU DESCRIPTION
TX3_25/33	Transformer 25 kVA 33 kV 3 bushing

Item Number	Stock Number	Description	Qty Rqd	Unit of Measure	Remarks
1	XT0220	Transformer 25kVA 33kV/440V	1	ea	
2	GA4057	Surge arrester	3	ea	REF. 3 of Index Table
3	GT0353	Transformer bushing cover	3	ea	

CU	CU DESCRIPTION
TX3_25/33B2	Transformer 25 kVA 33 kV 1 phase 2 bushing

Item Number	Stock Number	Description	Qty Rqd	Unit of Measure	Remarks
1	XT0205	Transformer 25kVA 33kV/440V	1	ea	
2	GA4057	Surge arrester	2	ea	REF. 3 of Index Table
3	GT0353	Transformer bushing cover	2	ea	

CU	CU DESCRIPTION
TX3_63/11	Transformer 63 kVA 11 kV 3 bushing

Item Number	Stock Number	Description	Qty Rqd	Unit of Measure	Remarks
1	XT0211	Transformer 63kVA 11kV/440V	1	ea	
2	GA4055	Surge arrester	3	ea	REF. 3 of Index Table
3	GT0353	Transformer bushing cover	3	ea	

CU	CU DESCRIPTION
TX3_63/22	Transformer 63 kVA 22 kV 3 bushing

Item Number	Stock Number	Description	Qty Rqd	Unit of Measure	Remarks
1	XT0216	Transformer 63kVA 22kV/440V	1	ea	
2	GA4056	Surge arrester	3	ea	REF. 3 of Index Table
3	GT0353	Transformer bushing cover	3	ea	

CU	CU DESCRIPTION
TX3_63/33	Transformer 63 kVA 33 kV 3 bushing

Item Number	Stock Number	Description	Qty Rqd	Unit of Measure	Remarks
1	XT0221	Transformer 63kVA 33kV/440V	1	ea	
2	GA4057	Surge arrester	3	ea	REF. 3 of Index Table
3	GT0353	Transformer bushing cover	3	ea	

CU	CU DESCRIPTION
TX3_100/11	Transformer 100 kVA 11 kV 3 bushing

Item Number	Stock Number	Description	Qty Rqd	Unit of Measure	Remarks
1	XT0212	Transformer 100 kVA 6.6-11kV/440V	1	ea	
2	GA4055	Surge arrester	3	ea	REF. 3 of Index Table
3	GT0353	Transformer bushing cover	3	ea	

CU	CU DESCRIPTION
TX3_100/22	Transformer 100 kVA 22 kV 3 bushing

Item Number	Stock Number	Description	Qty Rqd	Unit of Measure	Remarks
1	XT0217	Transformer 100 kVA 22kV/440V	1	ea	
2	GA4056	Surge arrester	3	ea	REF. 3 of Index Table
3	GT0353	Transformer bushing cover	3	ea	

CU	CU DESCRIPTION
TX3_100/33	Transformer 100 kVA 33 kV 3 bushing

Item Number	Stock Number	Description	Qty Rqd	Unit of Measure	Remarks
1	XT0222	Transformer 100 kVA 33kV/440V	1	ea	
2	GA4057	Surge arrester	3	ea	REF. 3 of Index Table
3	GT0353	Transformer bushing cover	3	ea	

CU	CU DESCRIPTION
TX3_200/11	Transformer 200 kVA 11 kV 3 bushing

Item Number	Stock Number	Description	Qty Rqd	Unit of Measure	Remarks
1	XT0213	Transformer 200kVA 6.6-11kV/440V	1	ea	
2	GA4055	Surge arrester	3	ea	REF. 3 of Index Table
3	GT0353	Transformer bushing cover	3	ea	

CU	CU DESCRIPTION
TX3_200/22	Transformer 200 kVA 22 kV 3 bushing

Item Number	Stock Number	Description	Qty Rqd	Unit of Measure	Remarks
1	XT0218	Transformer 200kVA 22kV/440V	1	ea	
2	GA4056	Surge arrester	3	ea	REF. 3 of Index Table
3	GT0353	Transformer bushing cover	3	ea	

CU	CU DESCRIPTION
TX3_200/33	Transformer 200 kVA 33 kV 3 bushing

Item Number	Stock Number	Description	Qty Rqd	Unit of Measure	Remarks
1	XT0223	Transformer 200kVA 33kV/440V	1	ea	
2	GA4057	Surge arrester	3	ea	REF. 3 of Index Table
3	GT0353	Transformer bushing cover	3	ea	

CU	CU DESCRIPTION
TX3_315/11	Transformer 315 kVA 11 kV 3 bushing

Item Number	Stock Number	Description	Qty Rqd	Unit of Measure	Remarks
1	XT0214	Transformer 315kVA 11kV/440V	1	ea	
2	GA4055	Surge arrester	3	ea	REF. 3 of Index Table
3	GT0353	Transformer bushing cover	3	ea	

CU	CU DESCRIPTION
TX3_315/22	Transformer 315 kVA 22 kV 3 bushing

Item Number	Stock Number	Description	Qty Rqd	Unit of Measure	Remarks
1	XT0219	Transformer 315kVA 22kV/440V	1	ea	
2	GA4056	Surge arrester	3	ea	REF. 3 of Index Table
3	GT0353	Transformer bushing cover	3	ea	

CU	CU DESCRIPTION
TX3_315/33	Transformer 315 kVA 33 kV 3 bushing

Item Number	Stock Number	Description	Qty Rqd	Unit of Measure	Remarks
1	XT0224	Transformer 315kVA 33kV/440V	1	ea	
2	GA4057	Surge arrester	3	ea	REF. 3 of Index Table
3	GT0353	Transformer bushing cover	3	ea	

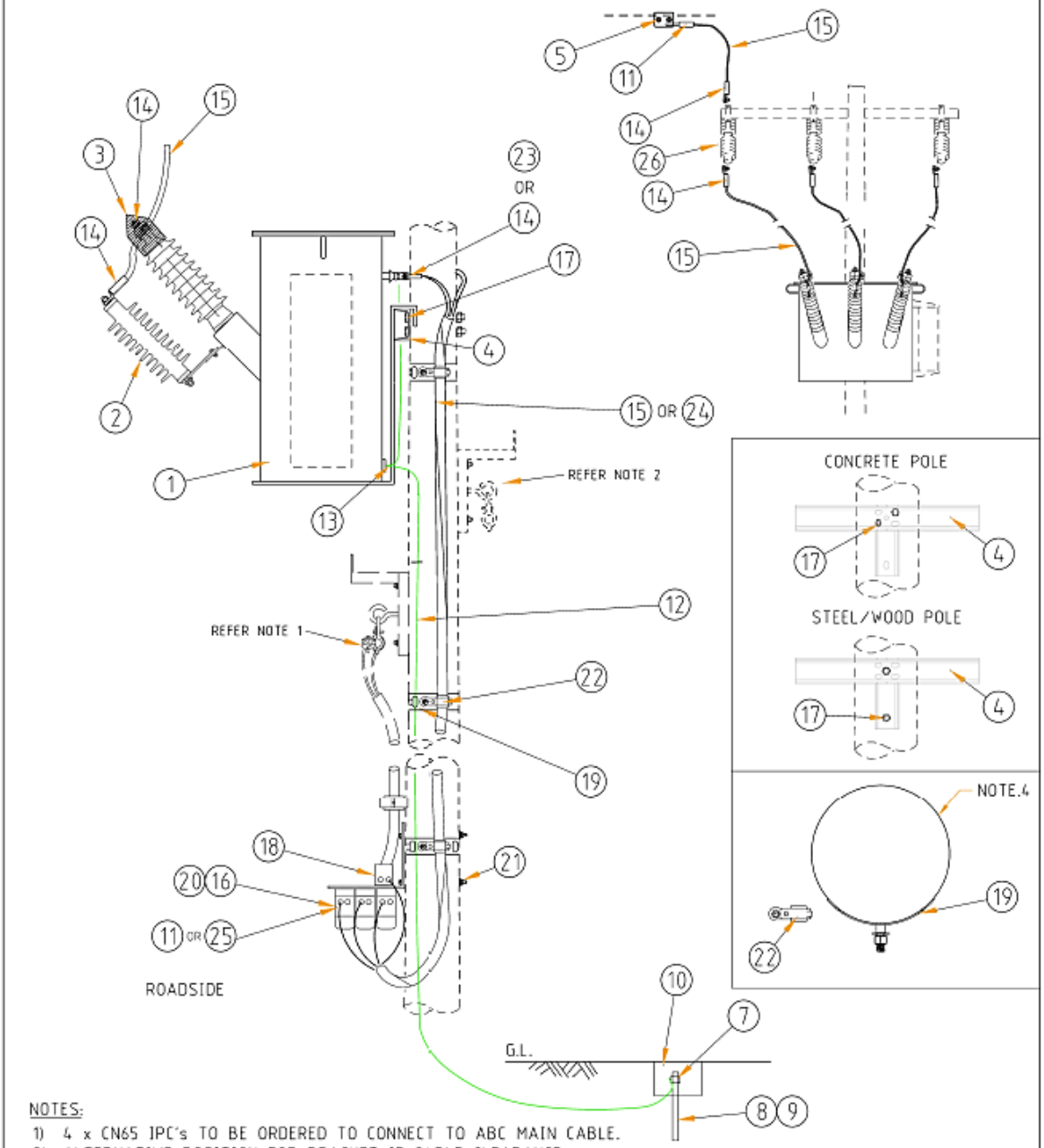

NOTES:

1) 4 x CN65 IPC's TO BE ORDERED TO CONNECT TO ABC MAIN CABLE.
2) ALTERNATIVE POSITION FOR BRACKET IF CABLE CLEARANCE CANNOT BE OBTAINED. (REFER TOABC701)
3) BANDIT STRAPING TO BE USED
4) 63KVA TX REPRESENTED. 25KVA HAS LV BUSHINGON THE SIDE OF THE TANK

HORIZON POWER DISTRIBUTION DESIGN CATALOGUE ENGINEERING DIVISION	COMPATIBLE UNIT	REVISION 4	DATE 11/06/25
	TRANSFORMER WITH LVABC 25, 63, 100 & 200 kVA	DRAWING No. TX4	

CU	CU DESCRIPTION
TX4_25/11	Transformer with LVABC 25 kVA 11 kV

Item Number	Stock Number	Description	Qty Rqd	Unit of Measure	Remarks
1	XT0210	Transformer 25kVA 6.6-11kV/440V	1	ea	
2	GA4055	Surge arrester	3	ea	REF. 3 of Index Table
3	GT0353	Transformer bushing cover	3	ea	
4	CB0112	Transformer hanger cross-arm (steel)	1	ea	
5		Select Parallel groove (PG) Clamp to suit conductor. **Select from CN9**	3	ea	
7	CE0058	Earth rod clamp	1	ea	
8	CE0078	Earth coupling	3	ea	
9	CE0135	Earth rod	4	ea	1.4 m
10	CE0201	Earth box	1	ea	
11		Splice 95 ABC to suit conductor and PG clamp. **Select from CN69 or CN70**	11	ea	
12	EE1264	70sq mm Stranded copper conductor	12	mtr	
13	FL1465	70sq mm Terminal lug M12	3	ea	
14	FL0401	Lug 95 ABC	19	ea	
15	FT0095	95 ABC 4 x 4 m long	3	ea	
16	GS0111	Fuse switch box	1	ea	
17	AB6737	Pole bolt M20 x 400 mm long with nut and washers	2	ea	
18	GS0109	Neutral block	1	ea	
19	CB3055	LV harness support bracket	4	ea	
20	GF2130	Fuse cartridge 100 amp	3	ea	
21	AB6733	Pole bolt M16 x 400 mm long with nut and washers	2	ea	REF. 2 of Index Table
22	CC0101	95 ABC clamp	4	ea	
If a drop out fuse is required					
26		Select Drop-out fuse cross-arm for intermediate. **Select from HV20.**	1	ea	

CU	CU DESCRIPTION
TX4_25/22	Transformer with LVABC 25 kVA 22 kV

Item Number	Stock Number	Description	Qty Rqd	Unit of Measure	Remarks
1	XT0215	Transformer 25kVA 22kV/440V	1	ea	
2	GA4056	Surge arrester	3	ea	REF. 3 of Index Table
3	GT0353	Transformer bushing cover	3	ea	
4	CB0112	Transformer hanger cross-arm (Steel)	1	ea	
5		Select Parallel groove (PG) Clamp to suit conductor. **Select from CN9**	3	ea	
7	CE0058	Earth rod clamp	1	ea	
8	CE0078	Earth coupling	3	ea	
9	CE0135	Earth rod	4	ea	1.4 m
10	CE0201	Earth box	1	ea	
11		Splice 95 ABC to suit conductor and PG clamp. **Select from CN69 or CN70**	11	ea	
12	EE1264	70sq mm Stranded copper conductor	12	mtr	
13	FL1465	70sq mm Terminal lug M12	3	ea	
14	FL0401	Lug 95 ABC	19	ea	
15	FT0095	95 ABC 4 x 4 m long	3	ea	
16	GS0111	Fuse switch box	1	ea	
17	AB6737	Pole bolt M20 x 400 mm long with nut and washers	2	ea	
18	GS0109	Neutral block with pole mounting bracket	1	ea	
19	CB3055	LV harness support bracket	4	ea	
20	GF2130	Fuse cartridge 100 amp	3	ea	
21	AB6733	Pole bolt M16 x 400 mm long with nut and washers	2	ea	REF. 2 of Index Table
22	CC0101	95 ABC clamp	4	ea	
If a drop out fuse is required					
26		Select Drop-out fuse cross-arm for intermediate. **Select from HV20.**	1	ea	

CU	CU DESCRIPTION
TX4_25/33	Transformer with LVABC 25 kVA 33 kV

Item Number	Stock Number	Description	Qty Rqd	Unit of Measure	Remarks
1	XT0220	Transformer 25kVA 33kV/440V	1	ea	
2	GA4057	Surge arrester	3	ea	REF. 3 of Index Table
3	GT0353	Transformer bushing cover	3	ea	
4	CB0112	Transformer hanger cross-arm (steel)	1	ea	
5		Select Parallel groove (PG) Clamp to suit conductor. **Select from CN9**	3	ea	
7	CE0058	Earth rod clamp	1	ea	
8	CE0078	Earth coupling	3	ea	
9	CE0135	Earth rod	4	ea	1.4 m
10	CE0201	Earth box	1	ea	
11		Splice 95 ABC to suit conductor and PG clamp. **Select from CN69 or CN70**	11	ea	
12	EE1264	70sq mm Stranded copper conductor	12	mtr	
13	FL1465	70sq mm Terminal lug M12	3	ea	
14	FL0401	Lug 95 ABC	19	ea	
15	FT0095	95 ABC 4 x 4 m long	3	ea	
16	GS0111	Fuse switch box	1	ea	
17	AB6737	Pole bolt M20 x 400 mm long with nut and washers	2	ea	
18	GS0109	Neutral block	1	ea	
19	CB3055	LV harness support bracket	4	ea	
20	GF2130	Fuse cartridge 100 amp	3	ea	
21	AB6733	Pole bolt M16 x 400 mm long with nut and washers	2	ea	REF. 2 of Index Table
22	CC0101	95 ABC clamp	4	ea	
If a drop out fuse is required					
26		Select Drop-out fuse cross-arm for intermediate. **Select from HV20.**	1	ea	

CU	CU DESCRIPTION
TX4_63/11	Transformer with LVABC 63 kVA 11 kV

Item Number	Stock Number	Description	Qty Rqd	Unit of Measure	Remarks
1	XT0211	Transformer 63kVA 6.6-11kV/440V	1	ea	
2	GA4055	Surge arrester	3	ea	REF. 3 of Index Table
3	GT0353	Transformer bushing cover	3	ea	
4	CB0112	Transformer hanger cross-arm (steel)	1	ea	
5		Select Parallel groove (PG) Clamp to suit conductor. **Select from CN9**	3	ea	
7	CE0058	Earth rod clamp	1	ea	
8	CE0078	Earth coupling	3	ea	
9	CE0135	Earth rod	4	ea	1.4 m
10	CE0201	Earth box	1	ea	
11		Splice 95 ABC to suit conductor and PG clamp. **Select from CN69 or CN70**	11	ea	
12	EE1264	70sq mm Stranded copper conductor	12	mtr	
13	FL1465	70sq mm Terminal lug M12	3	ea	
14	FL0401	Lug 95 ABC	19	ea	
15	FT0095	95 ABC 4 x 4 m long	3	ea	
16	GS0111	Fuse switch box	1	ea	
17	AB6737	Pole bolt M20 x 400 mm long with nut and washers	2	ea	
18	GS0109	Neutral block with pole mounting bracket	1	ea	
19	CB3055	LV harness support bracket	4	ea	
20	GF2130	Fuse cartridge 100 amp	3	ea	
21	AB6733	Pole bolt M16 x 400 mm long with nut and washers	2	ea	REF. 2 of Index Table
22	CC0101	95 ABC clamp	4	ea	
If a drop out fuse is required					
26		Select Drop-out fuse cross-arm for intermediate. **Select from HV20.**	1	ea	

CU	CU DESCRIPTION
TX4_63/22	Transformer with LVABC 63 kVA 22 kV

Item Number	Stock Number	Description	Qty Rqd	Unit of Measure	Remarks
1	XT0216	Transformer 63kVA 22kV/440V	1	ea	
2	GA4056	Surge arrester	3	ea	REF. 3 of Index Table
3	GT0353	Transformer bushing cover	3	ea	
4	CB0112	Transformer hanger cross-arm (steel)	1	ea	
5		Select Parallel groove (PG) Clamp to suit conductor. **Select from CN9**	3	ea	
7	CE0058	Earth rod clamp	1	ea	
8	CE0078	Earth coupling	3	ea	
9	CE0135	Earth rod	4	ea	1.4 m
10	CE0201	Earth box	1	ea	
11		Splice 95 ABC to suit conductor and PG clamp. **Select from CN69 or CN70**	11	ea	
12	EE1264	70sq mm Stranded copper conductor	12	mtr	
13	FL1465	70sq mm Terminal lug M12	3	ea	
14	FL0401	Lug 95 ABC	19	ea	
15	FT0095	95 ABC 4 x 4 m long	3	ea	
16	GS0111	Fuse switch box	1	ea	
17	AB6737	Pole bolt M20 x 400 mm long with nut and washers	2	ea	
18	GS0109	Neutral block	1	ea	
19	CB3055	LV harness support bracket	4	ea	
20	GF2130	Fuse cartridge 100 amp	3	ea	
21	AB6733	Pole bolt M16 x 400 mm long with nut and washers	2	ea	REF. 2 of Index Table
22	CC0101	95 ABC clamp	4	ea	
If a drop out fuse is required					
26		Select Drop-out fuse cross-arm for intermediate. **Select from HV20.**	1	ea	

CU	CU DESCRIPTION
TX4_63/33	Transformer with LVABC 63 kVA 33 kV

Item Number	Stock Number	Description	Qty Rqd	Unit of Measure	Remarks
1	XT0221	Transformer 63kVA 33kV/440V	1	ea	
2	GA4057	Surge arrester	3	ea	REF. 3 of Index Table
3	GT0353	Transformer bushing cover	3	ea	
4	CB0112	Transformer hanger cross-arm (Steel)	1	ea	
5		Select Parallel groove (PG) Clamp to suit conductor. **Select from CN9**	3	ea	
7	CE0058	Earth rod clamp	1	ea	
8	CE0078	Earth coupling	3	ea	
9	CE0135	Earth rod	4	ea	1.4 m
10	CE0201	Earth box	1	ea	
11		Splice 95 ABC to suit conductor and PG clamp. **Select from CN69 or CN70**	11	ea	
12	EE1264	70sq mm Stranded copper conductor	12	mtr	
13	FL1465	70sq mm Terminal lug M12	3	ea	
14	FL0401	Lug 95 ABC	19	ea	
15	FT0095	95 ABC 4 x 4 m long	3	ea	
16	GS0111	Fuse switch box	1	ea	
17	AB6737	Pole bolt M20 x 400 mm long with nut and washers	2	ea	
18	GS0109	Neutral block with pole mounting bracket	1	ea	
19	CB3055	LV harness support bracket	4	ea	
20	GF2130	Fuse cartridge 100 amp	3	ea	
21	AB6733	Pole bolt M16 x 400 mm long with nut and washers	2	ea	REF. 2 of Index Table
22	CC0101	95 ABC clamp	4	ea	
If a drop out fuse is required					
26		Select Drop-out fuse cross-arm for intermediate. **Select from HV20.**	1	ea	

CU	CU DESCRIPTION
TX4_100/11	Transformer with LVABC 100 kVA 11 kV

Item Number	Stock Number	Description	Qty Rqd	Unit of Measure	Remarks
1	XT0212	Transformer 100kVA 11kV/440V	1	ea	
2	GA4055	Surge arrester	3	ea	REF. 3 of Index Table
3	GT0353	Transformer bushing cover	3	ea	
4	CB0112	Transformer hanger cross-arm (steel)	1	ea	
5		Select Parallel groove (PG) Clamp to suit conductor. **Select from CN9**	3	ea	
7	CE0058	Earth rod clamp	1	ea	
8	CE0078	Earth coupling	3	ea	
9	CE0135	Earth rod	4	ea	1.4 m
10	CE0201	Earth box	1	ea	
11		Splice 95 ABC to suit conductor and PG clamp. **Select from CN69 or CN70**	11	ea	
12	EE1264	70sq mm Stranded copper conductor	12	mtr	
13	FL1465	70sq mm Terminal lug M12	3	ea	
14	FL0401	Lug 95 ABC	19	ea	
15	FT0095	95 ABC 4 x 4 m long	3	ea	
16	GS0111	Fuse switch box	1	ea	
17	AB6737	Pole bolt M20 x 400 mm long with nut and washers	2	ea	
18	GS0109	Neutral block	1	ea	
19	CB3055	LV harness support bracket	4	ea	
20	GF1096	Fuse cartridge 200A	3	ea	REF. 1 of Index Table
21	AB6733	Pole bolt M16 x 400 mm long with nut and washers	2	ea	REF. 2 of Index Table
22	CC0101	95 ABC clamp	4	ea	
If a drop out fuse is required					
26		Select Drop-out fuse cross-arm for intermediate. **Select from HV20.**	1	ea	

CU	CU DESCRIPTION
TX4_100/22	Transformer with LVABC 100 kVA 22 kV

Item Number	Stock Number	Description	Qty Rqd	Unit of Measure	Remarks
1	XT0217	Transformer 100kVA 22kV/440V	1	ea	
2	GA4056	Surge arrester	3	ea	REF. 3 of Index Table
3	GT0353	Transformer bushing cover	3	ea	
4	CB0112	Transformer hanger cross-arm (steel)	1	ea	
5		Select Parallel groove (PG) Clamp to suit conductor. **Select from CN9**	3	ea	
7	CE0058	Earth rod clamp	1	ea	
8	CE0078	Earth coupling	3	ea	
9	CE0135	Earth rod	4	ea	1.4 m
10	CE0201	Earth box	1	ea	
11		Splice 95 ABC to suit conductor and PG clamp. **Select from CN69 or CN70**	11	ea	
12	EE1264	70sq mm Stranded copper conductor	12	mtr	
13	FL1465	70sq mm Terminal lug M12	3	ea	
14	FL0401	Lug 95 ABC	19	ea	
15	FT0095	95 ABC 4 x 4 m long	3	ea	
16	GS0111	Fuse switch box	1	ea	
17	AB6737	Pole bolt M20 x 400 mm long with nut and washers	2	ea	
18	GS0109	Neutral block with pole mounting bracket	1	ea	
19	CB3055	LV harness support bracket	4	ea	
20	GF1096	Fuse cartridge 200A	3	ea	REF. 1 of Index Table
21	AB6733	Pole bolt M16 x 400 mm long with nut and washers	2	ea	REF. 2 of Index Table
22	CC0101	95 ABC clamp	4	ea	
If a drop out fuse is required					
26		Select Drop-out fuse cross-arm for intermediate. **Select from HV20.**	1	ea	

CU	CU DESCRIPTION
TX4_100/33	Transformer with LVABC 100 kVA 33 kV

Item Number	Stock Number	Description	Qty Rqd	Unit of Measure	Remarks
1	XT0222	Transformer 100kVA 33kV/440V	1	ea	
2	GA4057	Surge arrester	3	ea	REF. 3 of Index Table
3	GT0353	Transformer bushing cover	3	ea	
4	CB0112	Transformer hanger cross-arm (steel)	1	ea	
5		Select Parallel groove (PG) Clamp to suit conductor. **Select from CN9**	3	ea	
7	CE0058	Earth rod clamp	1	ea	
8	CE0078	Earth coupling	3	ea	
9	CE0135	Earth rod	4	ea	1.4 m
10	CE0201	Earth box	1	ea	
11		Splice 95 ABC to suit conductor and PG clamp. **Select from CN69 or CN70**	11	ea	
12	EE1264	70sq mm Stranded copper conductor	12	mtr	
13	FL1465	70sq mm Terminal lug M12	3	ea	
14	FL0401	Lug 95 ABC	19	ea	
15	FT0095	95 ABC 4 x 4 m long	3	ea	
16	GS0111	Fuse switch box	1	ea	
17	AB6737	Pole bolt M20 x 400 mm long with nut and washers	2	ea	
18	GS0109	Neutral block	1	ea	
19	CB3055	LV harness support bracket	4	ea	
20	GF1096	Fuse cartridge 200A	3	ea	REF. 1 of Index Table
21	AB6733	Pole bolt M16 x 400 mm long with nut and washers	2	ea	REF. 2 of Index Table
22	CC0101	95 ABC clamp	4	ea	
If a drop out fuse is required					
26		Select Drop-out fuse cross-arm for intermediate. **Select from HV20.**	1	ea	

CU	CU DESCRIPTION
TX4_200/11	Transformer with LVABC 200 kVA 11 kV

Item Number	Stock Number	Description	Qty Rqd	Unit of Measure	Remarks
1	XT0213	Transformer 200kVA 6.6-11kV/440V	1	ea	
2	GA4055	Surge arrester	3	ea	REF. 3 of Index Table
3	GT0353	Transformer bushing cover	3	ea	
4	CB0112	Transformer hanger cross-arm (steel)	1	ea	
5		Select Parallel groove (PG) Clamp to suit conductor. **Select from CN9**	3	ea	
7	CE0058	Earth rod clamp	1	ea	
8	CE0078	Earth coupling	3	ea	
9	CE0135	Earth rod	4	ea	1.4 m
10	CE0201	Earth box	1	ea	
11		Splice 95 ABC to suit conductor and PG clamp. **Select from CN69 or CN70**	3	ea	
12	EE1264	70sq mm Stranded copper conductor	12	mtr	
13	FL1465	70sq mm Terminal lug M12	3	ea	
14	FL0401	Lug 95 ABC	15	ea	
15	FT0095	95 ABC 4 x 4 m long	2	ea	
16	GS0111	Fuse switch box	1	ea	
17	AB6737	Pole bolt M20 x 400 mm long with nut and washers	2	ea	
18	GS0109	Neutral block	1	ea	
19	CB3055	LV harness support bracket	4	ea	
20	GF1101	Fuse cartridge 315 amp	3	ea	
21	AB6733	Pole bolt M16 x 400 mm long with nut and washers	2	ea	REF. 2 of Index Table
22	CC0110	150 ABC clamp	4	ea	
23	FL0402	Lug 150 ABC	4	ea	
24	FT0150	150 ABC 4 x 4 m long	1	ea	
25		Splice 150 ABC to suit conductor and PG clamp. **Select from CN69 or CN70**	8	ea	
If a drop out fuse is required					
26		Select Drop-out fuse cross-arm for intermediate. **Select from HV20.**	1	ea	

CU	CU DESCRIPTION
TX4_200/22	Transformer with LVABC 200 kVA 22 kV

Item Number	Stock Number	Description	Qty Rqd	Unit of Measure	Remarks
1	XT0218	Transformer 200kVA 22kV/440V	1	ea	
2	GA4056	Surge arrester	3	ea	REF. 3 of Index Table
3	GT0353	Transformer bushing cover	3	ea	
4	CB0112	Transformer hanger cross-arm (steel)	1	ea	
5		Select Parallel groove (PG) Clamp to suit conductor. **Select from CN9**	3	ea	
7	CE0058	Earth rod clamp	1	ea	
8	CE0078	Earth coupling	3	ea	
9	CE0135	Earth rod	4	ea	1.4 m
10	CE0201	Earth box	1	ea	
11		Splice 95 ABC to suit conductor and PG clamp. **Select from CN69 or CN70**	3	ea	
12	EE1264	70sq mm Stranded copper conductor	12	mtr	
13	FL1465	70sq mm Terminal lug M12	3	ea	
14	FL0401	Lug 95 ABC	15	ea	
15	FT0095	95 ABC 4 x 4 m long	2	ea	
16	GS0111	Fuse switch box	1	ea	
17	AB6737	Pole bolt M20 x 400 mm long with nut and washers	2	ea	
18	GS0109	Neutral block with pole mounting bracket	1	ea	
19	CB3055	LV harness support bracket	4	ea	
20	GF1101	Fuse cartridge 315 amp	3	ea	
21	AB6733	Pole bolt M16 x 400 mm long with nut and washers	2	ea	REF. 2 of Index Table
22	CC0110	150 ABC clamp	4	ea	
23	FL0402	Lug 150 ABC	4	ea	
24	FT0150	150 ABC 4 x 4 m long	1	ea	
25		Splice 150 ABC to suit conductor and PG clamp. **Select from CN69 or CN70**	8	ea	
If a drop out fuse is required					
26		Select Drop-out fuse cross-arm for intermediate. **Select from HV20.**	1	ea	

CU	CU DESCRIPTION
TX4_200/33	Transformer with LVABC 200 kVA 33 kV

Item Number	Stock Number	Description	Qty Rqd	Unit of Measure	Remarks
1	XT0223	Transformer 200kVA 33kV/440V	1	ea	
2	GA4057	Surge arrester	3	ea	REF. 3 of Index Table
3	GT0353	Transformer bushing cover	3	ea	
4	CB0112	Transformer hanger cross-arm (steel)	1	ea	
5		Select Parallel groove (PG) Clamp to suit conductor. **Select from CN9**	3	ea	
7	CE0058	Earth rod clamp	1	ea	
8	CE0078	Earth coupling	3	ea	
9	CE0135	Earth rod	4	ea	1.4 m
10	CE0201	Earth box	1	ea	
11		Splice 95 ABC to suit conductor and PG clamp. **Select from CN69 or CN70**	3	ea	
12	EE1264	70sq mm Stranded copper conductor	12	mtr	
13	FL1465	70sq mm Terminal lug M12	3	ea	
14	FL0401	Lug 95 ABC	15	ea	
15	FT0095	95 ABC 4 x 4 m long	2	ea	
16	GS0111	Fuse switch box	1	ea	
17	AB6737	Pole bolt M20 x 400 mm long with nut and washers	2	ea	
18	GS0109	Neutral block with pole mounting bracket	1	ea	
19	CB3055	LV harness support bracket	4	ea	
20	GF1101	Fuse cartridge 315 amp	3	ea	
21	AB6733	Pole bolt M16 x 400 mm long with nut and washers	2	ea	REF. 2 of Index Table
22	CC0110	150 ABC clamp	4	ea	
23	FL0402	Lug 150 ABC	4	ea	
24	FT0150	150 ABC 4 x 4 m long	1	ea	
25		Splice 150 ABC to suit conductor and PG clamp. **Select from CN69 or CN70**	8	ea	
If a drop out fuse is required					
26		Select Drop-out fuse cross-arm for intermediate. **Select from HV20.**	1	ea	

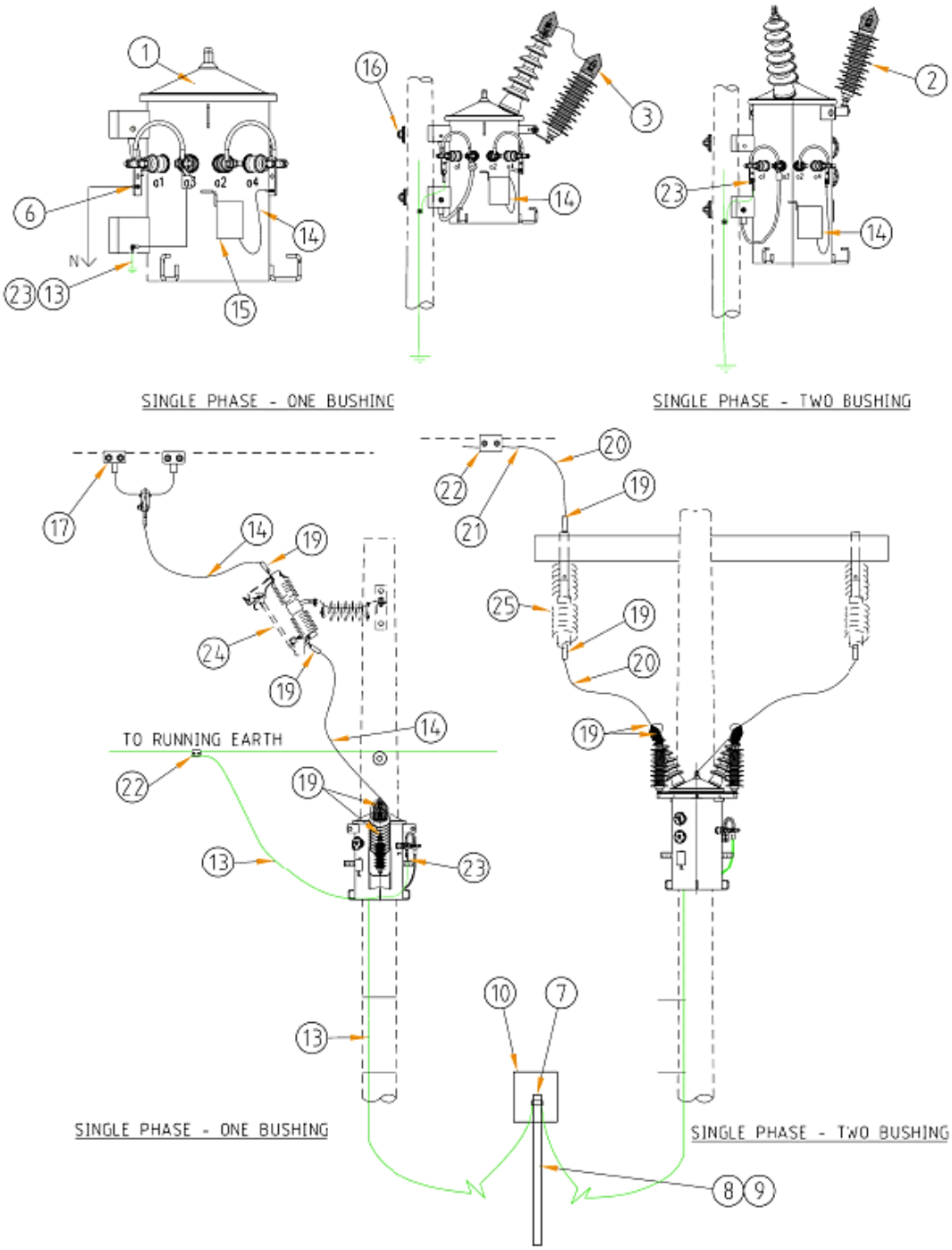

NOTES:
1) SEE TX5-2 FOR L.V CONNECTIONS.

HORIZON POWER DISTRIBUTION DESIGN CATALOGUE ENGINEERING DIVISION	COMPATIBLE UNIT	REVISION 5	DATE 11/06/25
	TRANSFORMER 10 & 25 kVA	DRAWING No. TX5-1	

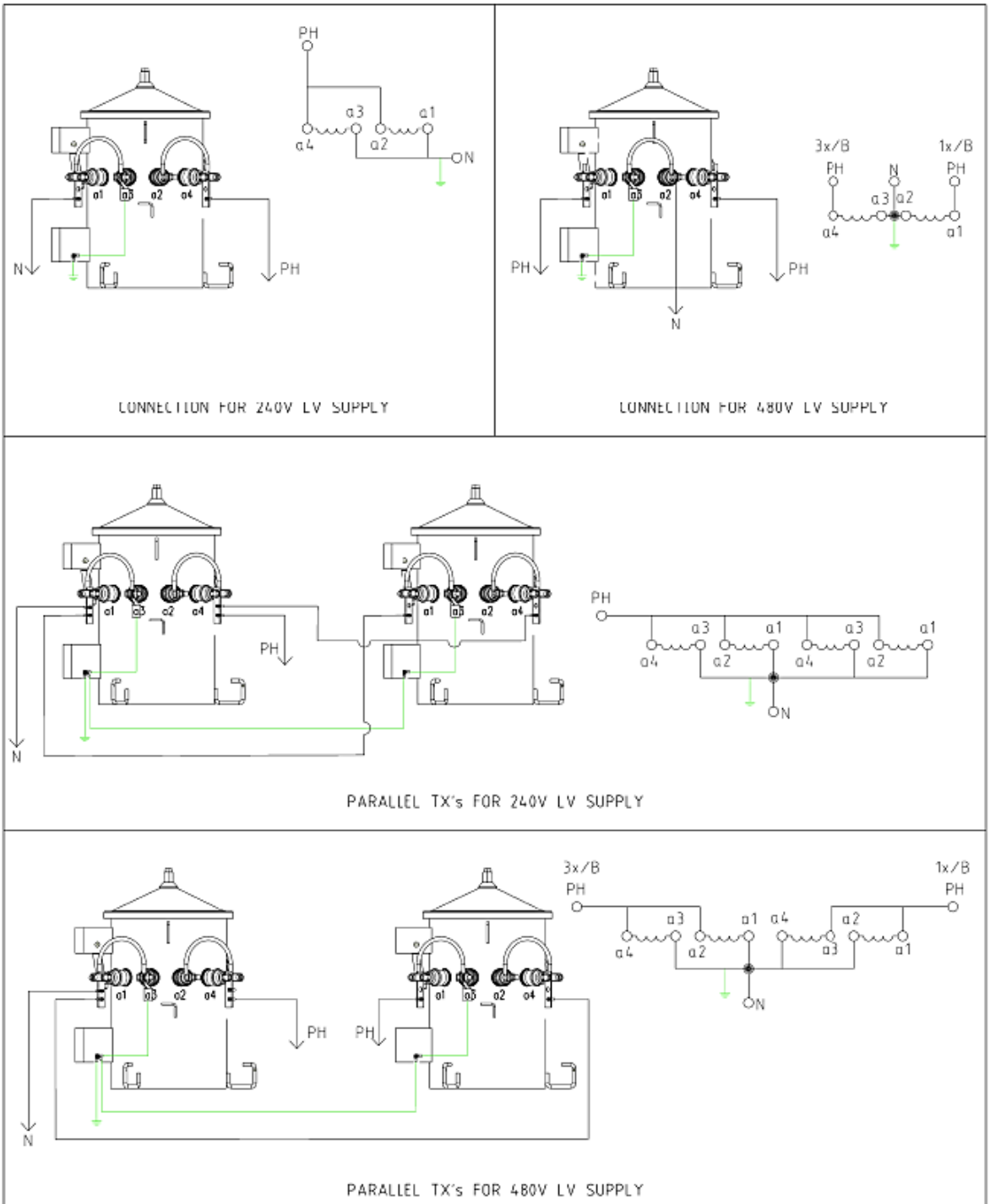

NOTES:

1) x - NUMBER OF RIBS OR CORE IDENTIFICATION NUMBER.

HORIZON POWER DISTRIBUTION DESIGN CATALOGUE ENGINEERING DIVISION	COMPATIBLE UNIT	REVISION 4	DATE 11/06/25
	EARTH & LV PHASE CONNECTIONS ONE & TWO HV BUSHING TRANSFORMERS	DRAWING No. TX5-2	

CU	CU DESCRIPTION
TX5_10/11B2	Transformer 10 kVA 11 kV 1 phase 2 bushing 240 V

Item Number	Stock Number	Description	Qty Rqd	Unit of Measure	Remarks
1	XT0202	Transformer 10kVA 6.6-11kV/250-500V	1	ea	
2	GA4055	Surge arrester	2	ea	REF. 3 of Index Table
3	GT0353	Transformer bushing cover	2	ea	
6	FL0142	Lug copper	2	ea	
7	CE0058	Earth rod clamp	1	ea	
8	CE0078	Earth coupling	3	ea	
9	CE0135	Earth rod	4	ea	1.4 m
10	CE0201	Earth box	1	~~ea~~	
13	EE1264	70sq mm stranded copper conductor	15	mtr	
14	EE1126	16sq mm Transformer to Fuse LV Supply	1	mtr	
15		Select fuse size to suit transformer output. **Select from CN35**	1	ea	REF. 4 of Index Table
16	AB6734	Pole bolt M16 x 300 mm long with nut and washers	2	ea	REF. 2 of Index Table
19	FL0401	Bi-metal lug 95 ABC	10	ea	
20	FT0095	95 ABC 4 x 4 m long	1	ea	
21	CJ0494	Splice 95 ABC with alum tail	2	ea	
22		Select Parallel groove (PG) Clamp to suit conductor. **Select from CN9**	3	ea	
23	FL1465	70sq mm Terminal lug M12	3	ea	
If a drop out fuse is required					
25		Select Drop-out fuse cross-arm for intermediate. **Select from HV20.**	1	ea	

U	CU DESCRIPTION
TX5_10/11B2P	Transformer 10 kVA 11 kV 1 phase 2 bushing 480 V

Item Number	Stock Number	Description	Qty Rqd	Unit of Measure	Remarks
1	XT0202	Transformer 10kVA 6.6-11kV/250-500V	1	ea	
2	GA4055	Surge arrester	2	ea	REF. 3 of Index Table
3	GT0353	Transformer bushing cover	2	ea	
6	FL0142	Lug copper	3	ea	
7	CE0058	Earth rod clamp	1	ea	
8	CE0078	Earth coupling	3	ea	
9	CE0135	Earth rod	4	ea	1.4 m
10	CE0201	Earth box	1	ea	
13	EE1264	70sq mm stranded copper conductor	15	mtr	
14	EE1126	16sq mm Transformer to Fuse LV Supply	1	mtr	
15		Select fuse size to suit transformer output. **Select from CN35**	2	ea	REF. 4 of Index Table
16	AB6734	Pole bolt M16 x 300 mm long with nut and washers	2	ea	REF. 2 of Index Table
19	FL0401	Bi-metal lug 95 ABC	10	ea	
20	FT0095	95 ABC 4 x 4 m long	1	ea	
21	CJ0494	Splice 95 ABC with alum tail	2	ea	
22		Select Parallel groove (PG) Clamp to suit conductor. **Select from CN9**	3	ea	
23	FL1465	70sq mm Terminal lug M12	3	ea	
If a drop out fuse is required					
25		Select Drop-out fuse cross-arm for intermediate. **Select from HV20.**	1	ea	

CU	CU DESCRIPTION
TX5_10/19.1	Transformer 10 kVA 19.1 kV 1 phase 1 bushing 240 V

Item Number	Stock Number	Description	Qty Rqd	Unit of Measure	Remarks
1	XT0208	Transformer 10kVA 19.1kV/250-500V	1	ea	
2	GA4057	Surge Arrester	1	ea	REF. 3 of Index Table
3	GT0353	Transformer bushing cover	1	ea	
6	FL0142	lug copper	2	ea	
7	CE0058	earth rod clamp	1	ea	
8	CE0078	earth coupling	3	ea	
9	CE0135	earth rod	4	ea	1.4 m
10	CE0201	earth box	1	ea	
13	EE1264	70sq mm stranded copper conductor	15	mtr	
14	EE1126	16sq mm transformer connections to Fuse LV Supply and Drop out Fuse	3	mtr	
15		Select fuse size to suit transformer output. **Select from CN35**	1	ea	REF. 4 of Index Table
16	AB6734	Pole bolt M16 x 300 mm long with nut and washers	2	ea	REF. 2 of Index Table
17		Stirrup Clamp. **Select from CN30** to suit conductor	1	ea	
19	FL1430	M12 Copper lug 16mm sq	5	ea	
22		Select Parallel groove (PG) Clamp to suit the running earth conductor. **Select from CN9**	1	ea	
23	FL1465	70sq mm Terminal lug M12	4	ea	Tx Earth
If a drop out fuse is required					
24		Single phase drop out fuse. **Select from HV60.**	1	ea	

CU	CU DESCRIPTION
TX5_10/19.1P	Transformer 10 kVA 19.1 kV 1 phase 1 bushing 480 V

Item Number	Stock Number	Description	Qty Rqd	Unit of Measure	Remarks
1	XT0208	Transformer 10kVA 19.1kV/250-500V	1	ea	
2	GA4057	Surge arrester	1	ea	REF. 3 of Index Table
3	GT0353	Transformer bushing cover	1	ea	
6	FL0142	Lug copper	3	ea	
7	CE0058	Earth rod clamp	1	ea	
8	CE0078	Earth coupling	3	ea	
9	CE0135	Earth rod	4	ea	1.4 m
10	CE0201	Earth box	1	ea	
13	EE1264	70sq mm stranded copper conductor	15	mtr	
14	EE1126	16sq mm transformer connections to Fuse LV Supply and Drop out Fuse	3	mtr	
15		Select fuse size to suit transformer output. **Select from CN35**	1	ea	REF. 4 of Index Table
16	AB6734	Pole bolt M16 x 300 mm long with nut and washers	2	ea	REF. 2 of Index Table
17		Stirrup Clamp. **Select from CN30** to suit conductor	1	ea	
19	FL1430	M12 Copper lug 16mm sq	5	ea	
22		Select Parallel groove (PG) Clamp to suit running earth conductor. **Select from CN9**	1	ea	
23	FL1465	70sq mm Terminal lug M12	4	ea	
If a drop out fuse is required					
24		Single phase drop out fuse. **Select from HV60.**	1	ea	

CU	CU DESCRIPTION
TX5_10/22B2	Transformer 10 kVA 22 kV 1 phase 2 bushing 240 V

Item Number	Stock Number	Description	Qty Rqd	Unit of Measure	Remarks
1	XT0203	Transformer 10kVA 22kV/250-500V	1	ea	
2	GA4056	Surge arrester	2	ea	REF. 3 of Index Table
3	GT0353	Transformer bushing cover	2	ea	
6	FL0142	Lug copper	2	ea	
7	CE0058	Earth rod clamp	1	ea	
8	CE0078	Earth coupling	3	ea	
9	CE0135	Earth rod	4	ea	1.4 m
10	CE0201	Earth box	1	ea	
13	EE1264	70sq mm stranded copper conductor	15	mtr	
14	EE1126	16sq mm Transformer to Fuse LV Supply	1	mtr	
15		Select fuse size to suit transformer output. **Select from CN35**	1	ea	REF. 4 of Index Table
16	AB6734	Pole bolt M16 x 300 mm long with nut and washers	2	ea	REF. 2 of Index Table
19	FL0401	Bi-metal lug 95 ABC	10	ea	
20	FT0095	95 ABC 4 x 4 m long	1	ea	
21	CJ0494	Splice 95 ABC with alum tail	2	ea	
22		Select Parallel groove (PG) Clamp to suit conductor. **Select from CN9**	3	ea	
23	FL1465	70sq mm Terminal lug M12	3	ea	
If a drop out fuse is required					
25		Select Drop-out fuse cross-arm for intermediate. **Select from HV20.**	1	ea	

CU	CU DESCRIPTION
TX5_10/22B2P	Transformer 10 kVA 22 kV 1 phase 2 bushing 480 V

Item Number	Stock Number	Description	Qty Rqd	Unit of Measure	Remarks
1	XT0203	Transformer 10kVA 22kV/250-500V	1	ea	
2	GA4056	Surge arrester	2	ea	REF. 3 of Index Table
3	GT0353	Transformer bushing cover	2	ea	
6	FL0142	Lug copper	3	ea	
7	CE0058	Earth rod clamp	1	ea	
8	CE0078	Earth coupling	3	ea	
9	CE0135	Earth rod	4	ea	1.4 m
10	CE0201	Earth box	1	ea	
13	EE1264	70sq mm stranded copper conductor	15	mtr	
14	EE1126	16sq mm Transformer to Fuse LV Supply	1	mtr	
15		Select fuse size to suit transformer output. **Select from CN35**	2	ea	REF. 4 of Index Table
16	AB6734	Pole bolt M16 x 300 mm long with nut and washers	2	ea	REF. 2 of Index Table
19	FL0401	Bi-metal lug 95 ABC	10	ea	
20	FT0095	95 ABC 4 x 4 m long	1	ea	
21	CJ0494	Splice 95 ABC with alum tail	2	ea	
22		Select Parallel groove (PG) Clamp to suit conductor. **Select from CN9**	3	ea	
23	FL1465	70sq mm Terminal lug M12	3	ea	
If a drop out fuse is required					
25		Select Drop-out fuse cross-arm for intermediate. **Select from HV20.**	1	ea	

CU	CU DESCRIPTION
TX5_25/19.1	Transformer 25 kVA 19.1 kV 1 phase 1 bushing 240 V

Item Number	Stock Number	Description	Qty Rqd	Unit of Measure	Remarks
1	XT0209	Transformer 25kVA 19.1kV/250-500V	1	ea	
2	GA4057	Surge arrester	1	ea	REF. 3 of Index Table
3	GT0353	Transformer bushing cover	1	ea	
6	FL0142	Lug copper	2	ea	
7	CE0058	Earth rod clamp	1	ea	
8	CE0078	Earth coupling	3	ea	
9	CE0135	Earth rod	4	ea	1.4 m
10	CE0201	Earth box	1	ea	
13	EE1264	70sq mm stranded copper conductor	15	mtr	
14	EE1126	16sq mm transformer connections to Fuse LV Supply and Drop out Fuse	3	mtr	
15		Select fuse size to suit transformer output. **Select from CN35**	1	ea	REF. 4 of Index Table
16	AB6734	Pole bolt M16 x 300 mm long with nut and washers	2	ea	REF. 2 of Index Table
17		Stirrup Clamp. **Select from CN30** to suit conductor	1	ea	
19	FL1430	M12 Copper lug 16mm sq	5	ea	
22		Select Parallel groove (PG) Clamp to suit running earth conductor. **Select from CN9**	1	ea	
23	FL1465	70sq mm Terminal lug M12	4	ea	
If a drop out fuse is required					
24		Single phase drop out fuse. **Select from HV60.**	1	ea	

CU	CU DESCRIPTION
TX5_25/19.1P	Transformer 25 kVA 19.1 kV 1 phase 1 bushing 480 V

Item Number	Stock Number	Description	Qty Rqd	Unit of Measure	Remarks
1	XT0209	Transformer 25kVA 19.1kV/250-500V	1	ea	
2	GA4057	Surge arrester	1	ea	REF. 3 of Index Table
3	GT0353	Transformer bushing cover	1	ea	
6	FL0142	Lug copper	3	ea	
7	CE0058	Earth rod clamp	1	ea	
8	CE0078	Earth coupling	3	ea	
9	CE0135	Earth rod	4	ea	1.4 m
10	CE0201	Earth box	1	ea	
13	EE1264	70sq mm stranded copper conductor	15	mtr	
14	EE1126	16sq mm transformer connections to Fuse LV Supply and Drop out Fuse	3	mtr	
15		Select fuse size to suit transformer output. **Select from CN35**	1	ea	REF. 4 of Index Table
16	AB6734	Pole bolt M16 x 300 mm long with nut and washers	2	ea	REF. 2 of Index Table
17		Stirrup Clamp. **Select from CN30** to suit conductor	1	ea	
19	FL1430	M12 Copper lug 16mm sq	5	ea	
22		Select Parallel groove (PG) Clamp to suit running earth conductor. **Select from CN9**	1	ea	
23	FL1465	70sq mm Terminal lug M12	4	ea	
If a drop out fuse is required					
24		Single phase drop out fuse. **Select from HV60.**	1	ea	

CU	CU DESCRIPTION
TX5_25/22B2	Transformer 25 kVA 22 kV 1 phase 2 bushing 240 V

Item Number	Stock Number	Description	Qty Rqd	Unit of Measure	Remarks
1	XT0204	Transformer 25kVA 22kV/250-500V	1	ea	
2	GA4056	Surge arrester	2	ea	REF. 3 of Index Table
3	GT0353	Transformer bushing cover	2	ea	
6	FL0142	Lug copper	2	ea	
7	CE0058	Earth rod clamp	1	ea	
8	CE0078	Earth coupling	3	ea	
9	CE0135	Earth rod	4	ea	1.4 m
10	CE0201	Earth box	1	ea	
13	EE1264	70sq mm stranded copper conductor	15	mtr	
14	EE1126	16sq mm Transformer to Fuse LV Supply	1	mtr	
15		Select fuse size to suit transformer output. **Select from CN35**	1	ea	REF. 4 of Index Table
16	AB6734	Pole bolt M16 x 300 mm long with nut and washers	2	ea	REF. 2 of Index Table
19	FL0401	Bi-metal lug 95 ABC	10	ea	
20	FT0095	95 ABC 4 x 4 m long	1	ea	
21	CJ0494	Splice 95 ABC with alum tail	2	ea	
22		Select Parallel groove (PG) Clamp to suit conductor. **Select from CN9**	3	ea	
23	FL1465	70sq mm Terminal lug M12	3	ea	
If a drop out fuse is required					
25		Select Drop-out fuse cross-arm for intermediate. **Select from HV20.**	1	ea	

CU	CU DESCRIPTION
TX5_25/22B2P	Transformer 25 kVA 22 kV 1 phase 2 bushing 480 V

Item Number	Stock Number	Description	Qty Rqd	Unit of Measure	Remarks
1	XT0204	Transformer 25kVA 22kV/250-500V	1	ea	
2	GA4056	Surge arrester	2	ea	REF. 3 of Index Table
3	GT0353	Transformer bushing cover	2	ea	
6	FL0142	Lug copper	3	ea	
7	CE0058	Earth rod clamp	1	ea	
8	CE0078	Earth coupling	3	ea	
9	CE0135	Earth rod	4	ea	1.4 m
10	CE0201	Earth box	1	ea	
13	EE1264	70sq mm stranded copper conductor	15	mtr	
14	EE1126	16sq mm Transformer to Fuse LV Supply	1	mtr	
15		Select fuse size to suit transformer output. **Select from CN35**	2	ea	REF. 4 of Index Table
16	AB6734	Pole bolt M16 x 300 mm long with nut and washers	2	ea	REF. 2 of Index Table
19	FL0401	Bi-metal lug 95 ABC	10	ea	
20	FT0095	95 ABC 4 x 4 m long	1	ea	
21	CJ0494	Splice 95 ABC with alum tail	2	ea	
22		Select Parallel groove (PG) Clamp to suit conductor. **Select from CN9**	3	ea	
23	FL1465	70sq mm Terminal lug M12	3	ea	
If a drop out fuse is required					
25		Select Drop-out fuse cross-arm for intermediate. **Select from HV20.**	1	ea	

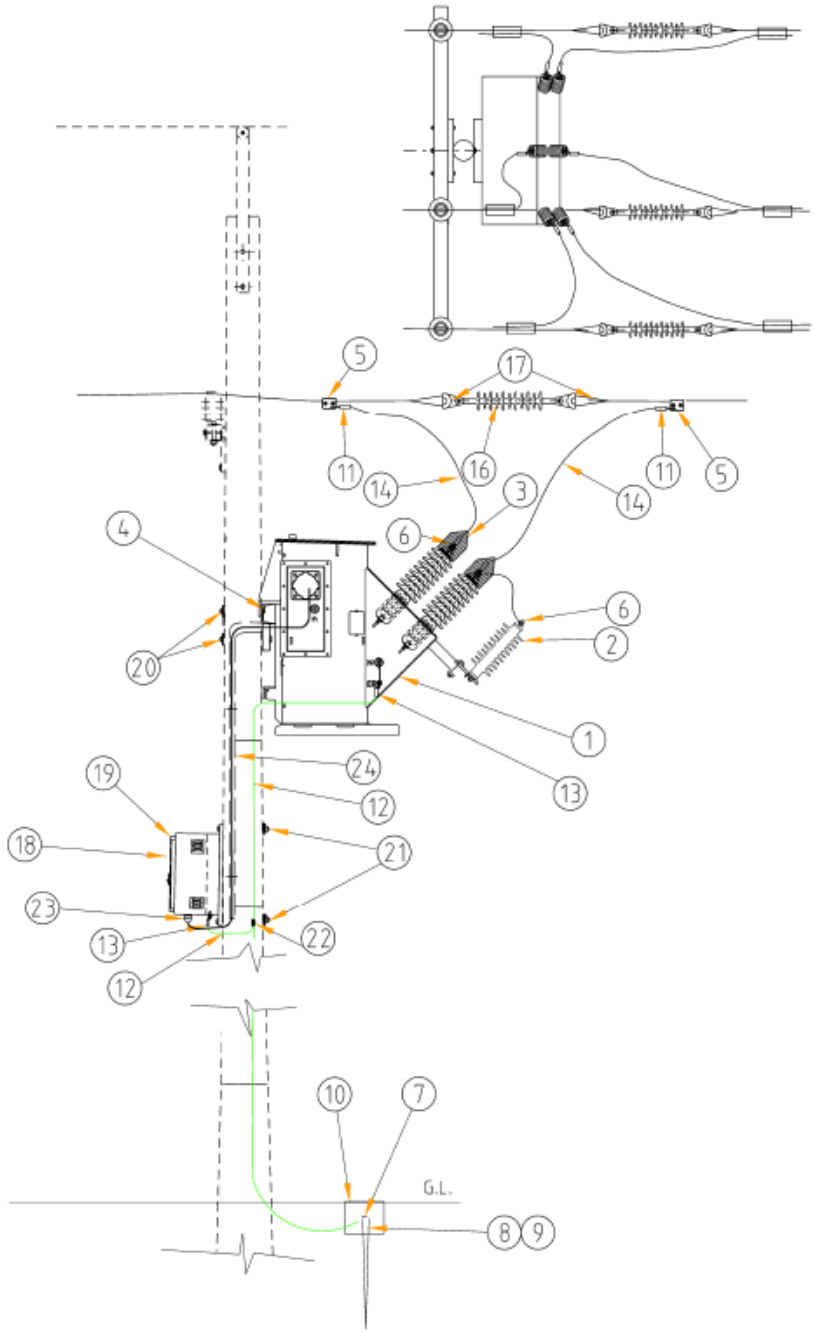

NOTES:

1) REFER TO H21 FOR RUNNING EARTH REQUIREMENTS.

HORIZON POWER DISTRIBUTION DESIGN CATALOGUE	COMPATIBLE UNIT	REVISION 4	DATE 11/06/25
	HV POLE TOP METERING (OUTDOOR)	DRAWING No. TX7	
ENGINEERING DIVISION			

CU	CU DESCRIPTION
TX7_22	Pole top metering outdoor 22 kV

Item Number	Stock Number	Description	Qty Rqd	Unit of Measure	Remarks
1	XA2429	Metering transformer w/secondary cable	1	ea	
2	GA4056	Surge arrestor	3	ea	REF. 3 of Index Table
3	GT0353	Transformer bushing cover	6	ea	
4	CB0112	Transformer hanger cross-arm (steel)	1	ea	
5		Select Parallel groove (PG) Clamp to suit conductor. **Select from CN9**	6	ea	
6	FL0401	Bi-metal lug 95 ABC	12	ea	
7	CE0058	Earth rod clamp	1	ea	
8	CE0078	Earth coupling	3	ea	
9	CE0135	Earth rod	4	ea	1.4 m
10	CE0201	Earth box	1	ea	
11	CJ0494	Splice 95 ABC with alum tail	6	ea	
12	EE1264	70sq mm Stranded copper conductor	14	mtr	
13	FL1465	70sq mm Terminal lug M12	1	ea	
14	FT0095	95 ABC 4 x 4 m long	2	ea	
16	IC0041	Strain insulator	3	ea	
17		Select termination to suit conductor termination. **Select from CN1-4**	6	ea	
18	FBH0830	Metering cubicle	1	ea	
19	HZ3333	Metering panel (single meter)	1	ea	
20	AB6737	Pole bolt M20 x 400 mm long with nut and washers	2	ea	
21	AB6732	Pole bolt M16 x 400 mm long with nut and washers	2	ea	REF. 2 of Index Table
22	CC0085	IPC clamp	1	ea	
23	GC7846	Conduit gland	1	ea	
24	GC7872	20mm Conduit PVC	1	roll	

CU	CU DESCRIPTION
TX7_33	Pole top metering outdoor 33 kV

Item Number	Stock Number	Description	Qty Rqd	Unit of Measure	Remarks
1	XA2431	Metering transformer w/secondary cable	1	ea	
2	GA4057	Surge arrestor	3	ea	REF. 3 of Index Table
3	GT0353	Transformer bushing cover	6	ea	
4	CB0112	Transformer hanger cross-arm (steel)	1	ea	
5		Select Parallel groove (PG) Clamp to suit conductor. Select from CN9. **Select from CN9**	6	ea	
6	FL0401	Bi-metal lug 95 ABC	12	ea	
7	CE0058	Earth rod clamp	1	ea	
8	CE0078	Earth coupling	3	ea	
9	CE0135	Earth rod	4	ea	1.4 m
10	CE0201	Earth box	1	ea	
11	CJ0494	Splice 95 ABC with alum tail	6	ea	
12	EE1264	70sq mm Stranded copper conductor	14	mtr	
13	FL1465	70sq mm Terminal lug M12	1	ea	
14	FT0095	95 ABC 4 x 4 m long	2	ea	
16	IC0041	Strain insulator	3	ea	
17		Select termination to suit conductor termination. **Select from CN1-4**	6	ea	
18	FBH0830	Metering cubicle	1	ea	
19	HZ3333	Metering panel (single meter)	1	ea	
20	AB6737	Pole bolt M20 x 400 mm long with nut and washers	2	ea	
21	AB6732	Pole bolt M16 x 400 mm long with nut and washers	2	ea	REF. 2 of Index Table
22	CC0085	IPC clamp	1	ea	
23	GC7846	Conduit gland	1	ea	
24	GC7872	20mm Conduit PVC	1	roll	

REVISION INFORMATION

(Informative) Horizon Power has endeavoured to provide standards of the highest quality and would appreciate notification if any errors are found or even queries raised.
Each Standard makes use of its own comment sheet which is maintained throughout the life of the standard, which lists all comments made by stakeholders regarding the standard.
The document **DM# 2152535** can be used to record any errors or queries found in or pertaining to this standard, which can then be addressed whenever the standard gets reviewed.

Date	Rev No.	Notes
	0	Western Power Supplied
01/07/2009	1	Original Horizon Power issue
01/01/2012	2	Change Document Control
21/01/2014	3	Index List • TX4_63/11 added TX1 Drawing • Bolt connection for Concrete, Steel and Wood added • Transformer harness bracket with bandit straps added • Notes 2 and 3 added • Item (21) removed • Dimensions removed TX1 List • Item (21) removed TX2 Sht 1 Drawing • Bolt connection for Concrete, Steel and Wood added • Transformer harness bracket with bandit straps added • Notes 1 and 2 added • Dimensions removed TX2 Sht 2 Drawing • Bolt connection for Concrete, Steel and Wood added • Transformer harness bracket with bandit straps added • Notes 1 and 2 added • Dimensions removed TX3 Drawing • Item (2) refers to surge arrestor • Item (3) refers to Transformer bushing cover • Notes 1 added TX3 List • Item (1) split into items (1) and (2) • Itme (2) changed to item (3) TX4 Drawing • Bolt connection for Concrete, Steel and Wood added • Transformer harness bracket with bandit straps added • Notes 1, 2, 3 and 4 added • Dimensions removed TX5 Sht 1 Drawing • Notes 1 added • Items (19), (20), (21) and (22) added TX5 Sht 2 Drawing • Notes 1 added • Secondary Wiring connects redrawn TX5 List • Item numbers rearranged • Items (19), (20), (21) and (22) added

		TX7 Drawing • Notes 1 added • Items rearranged TX7 List • Item numbers rearranged • Items (15) changed to Transformer bushing clamp
16/02/2024	4	**Drawings updated** Index List • Index table added. • TX7 updated. • Drawing updated TX1 Drawing • Items (6) removed. • Drawing updated TX2 Drawing • Items (6) removed. • Drawing updated TX4 Drawing • Items (6) removed. • Drawing updated TX5 Drawings • Items (11) removed. • TX5-1 Drawing updated TX7 Drawing • Updated Metering Unit drawing • Updated Metring control cubicle • Numbers adjusted. • REF. 1 removed and included into the CU List (Item23) • New items added (Items 20-23) • Drawing updated **Stock code changes** All Compatible Units (CUs) • CC0138 to CN9 • CE0055 to CE0058 • GT0351 to GT0353 • XT0008 to XT0210 • XT0030 to XT0215 • XT0141 to XT0221 • XT0143 to XT0211 • XT0140 to XT0216 • XT0010 to XT0213 • XT0018 to XT0206 • XT0020 to XT0207 • XT0022 to XT0208 • XT0024 to XT0209 • XT0026 to XT0203 • XT0029 to XT0204 • XT0032 to XT0217 • XT0033 to XT0218 • XT0035 to XT0220 • XT0038 to XT0222 • XT0040 to XT0205 • XT0143 to XT0211 • XT0181 to XT0224 • XT0182 to XT0219 • XT0184 to XT0214 • GA4000 to GA4054

		• GA4001 to GA4055 • GA4002 to GA4056 • GA4003 to GA4057 Stock Code GS0055 to GS0062 • TX2_100/11_D • TX2_100/22_D • TX2_100/33_D • TX2_200/6_D • TX2_200/11_D • TX2_200/22_D • TX2_200/33_D Stock Code FC0101 to CN30 • TX5_10/19.1 • TX5_10/19.1P • TX5_25/19.1 • TX5_25/19.1P Stock Code CT0011 to CN1-4 • TX 7 Stock Code FB0831 to HZN3333 • TX 7 Stock Code CC0300 removed • TX1 • TX2 • TX4 • TX5 • TX7 Stock Code FL0401 and FL0402 quantities updated • TX1 • TX2 • TX4 • TX5 • TX7 Stock code FT0095 quantity updated • TX1_25/11 • TX1_25/22 • TX1_25/33 Stock code CJ0492 name and quantity updated • TX1_25/11 • TX1_25/22 • TX1_25/33 • TX1_63/11 • TX1_63_22 • TX1_63_33 Stock code CJ0494 removed and replaced with “Select from CN69 or CN70” • TX1_25/11 • TX1_25/22 • TX1_25/33 • TX1_63/11 • TX1_63/22 • TX1_63/33 • TX4_25/6 • TX4_25/11 • TX4_25/22 • TX4_25/33 • TX4_63/11 • TX4_63/22

		• TX4_63/33
		• TX4_100/11
		• TX4_100/22
		• TX4_100/33
		• TX4_200/6
		• TX4_200/11
		• TX4_200/22
		• TX4_200/33
		Stock code GC7846 and GC7872 added
		• TX7
		Stock code EE1128 and GS0109 removed
		• TX1
		Surge arrester stock codes GA4055, GA4056, GA4057
		• Remark added " REF. 3 of Index Table"
		Stock codes under TX5
		• Added stock code FL1465
		• Changed EE1126 to EE1437
		• Changed EE1205 to EE1264
		• Removed stock code GF1510
		• Removed stock code FT0001
		• Added stock code FL1430 (Single Phase – 1 Bushing Txs only)
		Stock codes under TX5 – Single Phase 1 Bushing
		• Changed EE1126 QTY from 1 to 3 mtrs
		• Added stock code FL1430 (Single Phase – 1 Bushing Txs only)
		• Removed Stock codes
		  ○ FT0095
		  ○ CJ0494
		  ○ FL0401

10/06/2025	5	Index List
		• CUs Removed
		  ○ TX2_200/6_F
		  ○ TX3_25/6
		  ○ TX3_63/6
		  ○ TX3_200/6
		  ○ TX3_315/6
		  ○ TX4_25/6
		  ○ TX4_200/6
		• Index Drawing updated
		TX1 Drawing
		• Item (23) added
		• TX1_2 drawing updated
		TX2 Drawing
		• Item (22) added
		• TX2_2 drawing updated
		TX3 Drawing
		• TX3_1 drawing updated
		TX4 Drawing
		• Item (26) added
		• TX4_2 drawing updated
		TX5 Drawing
		• Item (24 & 25) added
		• TX5-1_3 drawing updated
		• TX5-2_3 drawing updated
		TX7 Drawing
		• TX7_3 drawing updated